BASIS INVENTORY FOR GREATER-THAN-CLASS-C LOW-LEVEL RADIOACTIVE WASTE ENVIRONMENTAL IMPACT STATEMENT EVALUATIONS
Revision 1

Prepared by Sandia National Laboratories
For the U.S. Department of Energy
Washington, DC
May 2008

Sandia is a multi program laboratory operated by Sandia Corporation, a Lockheed Martin Company, for the United States Department of Energy's National Nuclear Security Administration under Contract DE-AC04-94AL85000.

DISCLAIMER

Subsequent to issuing this report, changes were made to the inventory for the GTCC LLW EIS and are documented in the *Supplement to Greater-Than-Class C (GTCC) Low-Level Radioactive Waste and U.S. Department of Energy GTCC-Like Waste Inventory Reports*. Changes were made in a couple of cases where errors were found in this report. In addition, INEEL and West Valley changed their inventory estimates subsequent to finalization of this report. The changes were in response to:

- Four INEEL waste streams 4468N-ATR-metals, RSWF-RTP-CDR-001, -002, -and -004 were deleted,
- Eleven INEEL stored RH waste streams were mistakenly identified as stored CH waste streams,
- West Valley stored CH volume was reduced,
- ORNL projected RH waste streams were mistakenly identified as stored RH waste streams,
- West Valley stored RH volume was increased,
- BWTX projected RH waste stream was mistakenly identified as a projected CH waste stream,
- West Valley projected CH volume was reduced,
- West Valley projected RH volume was increased,
- and INEEL waste streams 3337.R1-22126K, Monsanto (IDC 540, and 545),Babcock & Wilcox (IDC 515) and 4607N were deleted.

These changes impact the volumes, activities, and waste packages reported in Section 4 for the DOE-Like Activated Metals inventory and Section 5 for the Other Miscellaneous Waste inventory.

TABLE OF CONTENTS

ACRONYMS AND ABBREVIATIONS 8

GLOSSARY 10

1. INTRODUCTION 11
   1.1 BACKGROUND 11
   1.2 PURPOSE 13
   1.3 METHODS AND ASSUMPTIONS 14

2. NUCLEAR UTILITY GTCC LLW ACTIVATED METAL 15
   2.1 ESTIMATED VOLUMES 15
   2.2 CHEMICAL AND PHYSICAL FORMS 16
   2.3 ESTIMATED ACTIVITIES 16
      2.3.1 Activity of GTCC LLW from PWRs 17
      2.3.2 Activity of GTCC LLW from BWRs 18
   2.4 PACKAGES 20
      2.4.1 Waste Packages and Locations 23
      2.4.2 Shipping Containers 24
      2.4.3 Disposal Packages 25
   2.5 WASTE STREAMS 26
      2.5.1 Generation Rates 26
      2.5.2 Numbers of Containers 27
      2.5.3 Container Activities 27
      2.5.4 Shipments, Shipping Containers, and Disposal Packages 28

3. SEALED SOURCE GTCC LLW AND DOE GTCC-LIKE WASTE 30
   3.1 ESTIMATED VOLUMES 30
   3.2 CHEMICAL AND PHYSICAL FORMS 32
   3.3 ESTIMATED ACTIVITIES 32
   3.4 PACKAGES 33
      3.4.1 Waste Packages and Locations 33
      3.4.2 Shipping Containers 33
      3.4.3 Disposal Packages 38
   3.5 WASTE STREAMS 38
      3.5.1 Generation Rates 38
      3.5.2 Waste Stream Volumes and Numbers of Containers 39
      3.5.3 Waste Stream Activities 39
      3.5.4 Shipments, Shipping Containers, and Disposal Packages 39
      3.5.5 Waste Stream Container Activities 39

4. DOE GTCC-LIKE ACTIVATED METALS 45
   4.1 ESTIMATED VOLUMES 45
   4.2 CHEMICAL AND PHYSICAL FORMS 45
   4.3 ESTIMATED ACTIVITIES 45

4.4 PACKAGES 46
4.4.1 Waste Packages and Locations....46
4.4.2 Shipping Containers 49
4.4.3 Disposal Packages 49
4.5 WASTE STREAMS 49
4.5.1 Generation Rates 49
4.5.2 Numbers of Containers....50
4.5.3 Container Activities....50
4.5.4 Shipments, Shipping Containers, and Disposal Packages....51

5. GTCC LLW AND DOE GTCC-LIKE OTHER WASTES....52
5.1 ESTIMATED VOLUMES....52
5.2 CHEMICAL AND PHYSICAL FORMS....52
5.3 ESTIMATED ACTIVITIES....53
5.4 PACKAGES 53
5.4.1 Waste Packages and Locations....53
5.4.2 Shipping Containers 54
5.4.3 Disposal Packages 59
5.5 WASTE STREAMS 59
5.5.1 Generation Rates 59
5.5.2 Waste Stream Volumes and Numbers of Containers 59
5.5.3 Waste Stream Activities 60
5.5.4 Shipments, Shipping Containers, and Disposal Packages....63
5.5.5 Waste Stream Container Activities 63

6. REFERENCES 68

Appendix A Calculation Of Shipments, Shipping Containers, and Disposal Packages for Sealed Sources 72

Appendix B DOE GTCC-Like Activated Metals Included in the Inventory for the GTCC LLW EIS....75

Appendix C *Weight Calculations for a Standard 55 Gallon Drum in Support of the Greater Than Class C Low Level Radioactive Waste Environmental Impact Statement Evaluations*, Hillesheim, M. and K. D. Hendren

Appendix D *Activated Metal Canister Volume and Weight Calculations in Support of the Greater-Than-Class-C Low-Level Radioactive Waste Environmental Impact Statement Evaluations*, Hillesheim, M. and J. R. Schemerhorn

Appendix E *Supporting Estimates for the Number of TADs for the Greater-Than-Class-C Low-Level Radioactive Waste Environmental Impact Statement Evaluations*, Leigh, C. D.

Appendix F *Supporting Other Miscellaneous Waste Inventory Estimates for the Greater-Than-Class-C Low-Level Radioactive Waste Environmental Impact Statement Evaluations*, Trone, J. R.

Appendix G *Package Configuration for Disposing of Nuclear Utility Greater-Than-Class-C Low-Level Radioactive Waste in the Waste Isolation Pilot Plant (WIPP)*, Leigh, C. D. and J. R. Trone

Appendix H *Supporting Nuclear Utility Inventory Estimates for the Greater-Than-Class-C Low-Level Radioactive Waste Environmental Impact Statement Evaluations*, Schelling, J., C. D. Leigh, et al.

Appendix I *Supporting Sealed Source Waste Inventory Estimates for the Greater-Than-Class-C Low-Level Radioactive Waste Environmental Impact Statement Evaluations,* Schelling, J. and J. R. Trone

Appendix J *Calculation of the Loaded Weight of the RH Canister for the Greater-Than-Class C Low-Level Radioactive Waste Environmental Impact Statement Evaluations*, Trone, J. R. and K. Hendren

Appendix K *Supporting Shielding Calculations for the Greater Than Class C Low Level Radioactive Waste Environmental Impact Statement Evaluations*, Weiner, R. F., D. Osborn, et al.

FIGURES

Figure 1. Relationship Among Tasks Supporting the GTCC LLW EIS 14

Figure 2. Distribution of Nuclear Power Plant Shutdown Dates Assuming 60 Years of Operation 26

TABLES

Table 1. Summary of GTCC LLW and DOE GTCC-like Waste Volumes 12

Table 2. Summary of GTCC LLW and DOE GTCC-like Waste Activities 13

Table 3. Stored and Projected Nuclear Utility GTCC LLW Volumes 15

Table 4. Nuclear Utility GTCC LLW Total Activity at Shutdown and at Availability 16

Table 5. Nuclear Utility GTCC LLW Activity at Shutdown and at Availability 20

Table 6. Package Descriptions for Nuclear Utility GTCC LLW 21

Table 7. Nuclear Utility GTCC LLW Waste Streams 26

Table 8. Nuclear Utility GTCC LLW Waste Stream Volumes and Number of Containers 27

Table 9. Nuclear Utility Stored and Projected Waste Activities Per Container at Availability 27

Table 10. Nuclear Utility GTCC LLW Waste Stream Shipments, Shipping Containers, and Disposal Packages 28

Table 11. Packaging Limits for Sealed Sources 31

Table 12. Number of 55-gallon Drums and Associated Volumes for GTCC LLW and DOE GTCC-like Sealed Sources 31

Table 13. Radionuclide Activities for GTCC LLW and DOE GTCC-like Sealed Sources 32

Table 14. Package Descriptions for GTCC LLW and DOE GTCC-like Sealed Sources 35

Table 15. GTCC LLW and DOE GTCC-like Sealed Source Waste Streams 38

Table 16. GTCC LLW and DOE GTCC-like Sealed Source Waste Stream Volumes and Containers 40

Table 17. GTCC LLW and DOE GTCC-like Sealed Source Waste Stream Activities 41

Table 18. GTCC LLW and DOE GTCC-like Sealed Source Shipments, Shipping Containers, and Disposal Packages 42

Table 19. Waste Stream Container Activities for Sealed Sources 43

Table 20. Volumes for DOE GTCC-like Activated Metals 45

Table 21. Radionuclide Activities for DOE GTCC-like Activated Metals 46

Table 22. Package Descriptions for DOE GTCC-like Activated Metals 47

Table 23. DOE GTCC-like Activated Metal Waste Streams 49

Table 24. DOE GTCC-like Activated Metal Waste Stream Volume and Number of Containers 50

Table 25. DOE GTCC-like Activated Metal Waste Stream Activities 50

Table 26. Nuclear Utility GTCC LLW Waste Stream Shipments, Shipping Containers, and Disposal Packages 51

Table 27. Total Volume of CH and RH Other Waste Included in the GTCC LLW EIS Analysis 52

Table 28. Radionuclide Activities for GTCC LLW and DOE GTCC-like Other Waste 53

Table 29. Package Descriptions for GTCC LLW and DOE GTCC-like Other Wastes 56

Table 30. GTCC LLW and DOE GTCC-like Other Waste Streams 60

Table 31. GTCC LLW and DOE GTCC-like Other Waste Volumes and Containers 60

Table 32. GTCC LLW and DOE GTCC-like Other Waste Stream Activities 61

Table 33. GTCC LLW and DOE GTCC-like Other Waste Stream Shipping Containers, Shipments, and Disposal Packages 64

Table 34. GTCC LLW and DOE GTCC-like Other Waste Stream Container Activities 66

Table A.1 Shipments and Containers for Sealed Sources
Table B.1 DOE GTCC-like Activated Metals Included in the Inventory for the GTCC LLW EIS
Table B.2 DOE GTCC-like Activated Metals Activity Summary
Table B.3 Estimated Canister Numbers Shipments for DOE GTCC-like Activated Metals
Table B.4 Estimated Shipments for DOE GTCC-like Activated Metals
Table B.5 Estimated GTCC-like Activated Metals Disposal Packages For Various Disposal Configurations
Table B.6 Estimated Container Activities for DOE GTCC-like Activated Metals – AMCs
Table B.7 Estimated Container Activities for DOE GTCC-like Activated Metals – SAMCs
Table B.8 Estimated Container Activities for DOE GTCC-like Activated Metals – h-SAMCs
Table B.9 Estimated Container Activities for DOE GTCC-like Activated Metals – RH Canisters

ACRONYMS AND ABBREVIATIONS

ACA	After Concentration Averaging
ALARA	As Low As Reasonably Achievable
AMC	Activated Metal Canister
ATR	Advanced Test Reactor
BWR	Boiling Water Reactor
BWXT	BWX Technologies -Lynchburg Virginia
CFR	Code of Federal Regulations
CH	Contact-handled
Ci	Curies
CRA	Compliance Recertification Application
DOE	U.S. Department of Energy
DOT	U.S. Department of Transportation
EFPY	Effective Full Power Years
EIS	Environmental Impact Statement
EIA	Energy Information Administration
EPA	U.S. Environmental Protection Agency
EPRI	Electric Power Research Institute
FR	Federal Register
GTCC	Greater-Than-Class-C
IAEA	International Atomic Energy Agency
INL	Idaho National Laboratory
ISSD	Interim Sealed Source Database
KAPL	Knolls Atomic Power Laboratory
LANL	Los Alamos National Laboratory
LLNL	Lawrence Livermore National Laboratory
LLRWPAA	Low-Level Radioactive Waste Policy Amendments Act
LLW	Low-Level Radioactive Waste
MCW	Maximum Contents Weight
MGW	Maximum Gross Weight
MTR	Materials Test Reactor
MW(e)	Mega Watts of Electrical Output
MWt	Mega Watts of Thermal Output
NAC-STC	NAC International Storage Transportation Container
NM	New Mexico
NRC	U.S. Nuclear Regulatory Commission
NRF	Naval Reactor Facility
NV	Nevada
ORR	Oak Ridge Reservation
ORNL	Oak Ridge National Laboratory
OSRP	Off-Site Source Recovery Project
OTA	Office of Technology Assessment
PWR	Pressurized Water Reactor
RAMPAC	Radioactive Material Packaging
RH	remote-handled

RSRT	Radiological Source Registry and Tracking System
RPS	Radioisotope Power Systems
SAMC	Shielded Activated Metal Canister
SNL	Sandia National Laboratories
SRS	Savannah River Site
TN	Tennessee
TRU	Transuranic Waste
VA	Virginia
WAC	Waste Acceptance Criteria
WIPP	Waste Isolation Pilot Plant
WVDP	West Valley Demonstration Project
YM	Yucca Mountain

Ac	Actinium
Am	Americium
Be	Beryllium
Bk	Berkelium
C	Carbon
Cf	Californium
Cl	Chlorine
Cm	Curium
Co	Cobalt
Cs	Cesium
Eu	Europium
F	Flourine
Fe	Iron
H	Hydrogen
I	Iodine
Mn	Manganese
Mo	Molybdenum
Nb	Niobium
Ni	Nickel
Np	Neptunium
O	Oxygen
Pb	Lead
Pu	Plutonium
Sr	Strontium
Tc	Technetium
Th	Thorium
Ti	Titanium
U	Uranium

GLOSSARY

Anticipated volume – The sum of the stored and projected volumes.

Disposal package – Assembly of components intended to retain the radioactive material for disposal.

Land disposal sites – the DOE sites and generic commercial sites that are not geologic repositories but are being considered for disposal of GTCC LLW and DOE GTCC-like waste in the EIS.

Projected volume – Volume of waste that is forecasted to be generated in future years (after 2005).

Shipping container – Assembly of components intended to retain the radioactive material during transport and necessary to ensure compliance with transportation packaging regulations.

Shipment – Movement of a waste package or waste packages from its (their) original stored location to the disposal location by truck or rail.

Stored volume – Volume of waste that has already been generated (through 2005).

Type B package – Type B packaging together with its radioactive contents.

Type B packaging – packaging that ensures that the package can withstand the accident environment decribed in 10 CFR 71 Subpart E.

Waste package – Packaging together with radioactive contents presented for transport.

1. INTRODUCTION

The Low-Level Radioactive Waste Policy Amendments Act of 1985 (LLRWPAA) assigned the United States Federal Government the responsibility for disposing of Greater-Than-Class-C (GTCC) low-level radioactive waste (LLW) generated by activities licensed by U.S. Nuclear Regulatory Commission (NRC) or Agreement States (42 USC 2021 as amended). The LLRWPAA requires that the Federal Government provide for the disposal of GTCC LLW in a facility that adequately protects the safety and health of the public and is licensed by NRC. As part of the responsibilities assigned to the U.S. Department of Energy (DOE) in the LLRWPAA, the DOE has begun the environmental impact statement (EIS) process for development of a disposal capability for GTCC LLW and DOE GTCC-like waste[1].

The sites under consideration for the GTCC LLW EIS are the Waste Isolation Pilot Plant (WIPP), the Yucca Mountain (YM) repository, other DOE sites, and generic commercial sites. The other DOE sites and the generic commercial sites are referred to as land disposal sites throughout the remainder of this document.

1.1 BACKGROUND

In 10 CFR 61, the NRC established waste classifications for near-surface disposal of radioactive waste other than high-level and byproduct waste (e.g., uranium mill tailings). LLW exceeding the maximum concentration limits of radionuclides established by NRC for Class C waste is referred to as "Greater-Than-Class-C" (GTCC) and is not generally acceptable for near-surface disposal. In anticipation of the upcoming GTCC LLW EIS, the DOE recently (U. S. DOE 2007a) prepared an update to their 1994 GTCC LLW inventory estimates, *Greater-Than-Class C Low-Level Radioactive Waste Characterization: Estimated Volumes, Radionuclides, Activities, and Other Characteristics* (DOE/LLW-114) (U. S. DOE 1994). The DOE update is titled *Greater-Than-Class-C Low-Level Radioactive Waste and DOE Greater-Than-Class-C-Like Waste Inventory Estimates* (U. S. DOE 2007a). The 2007 inventory update (U. S. DOE 2007a) uses the best available data and is intended to assist the DOE in planning for the disposal of GTCC LLW, as required by the LLRWPAA.

The 2007 update (U. S. DOE 2007a) presents summary estimates for three GTCC LLW waste forms: activated metal waste, sealed sources, and other commercial generator waste. In addition, estimates are provided in the 2007 update for a fourth group, referred to in this report as DOE GTCC-like waste. DOE GTCC-like waste includes DOE-owned or generated waste having characteristics similar to GTCC LLW which may not have an identified path to disposal. This waste includes DOE activated metals, DOE sealed sources, and other DOE waste similar to commercial other waste.

Table 1 provides a summary of the waste volumes for GTCC LLW and DOE GTCC-like waste from the 2007 inventory update (U. S. DOE 2007a). The stored volumes are as of 2005 and include all waste that has already been generated and is waiting for a disposal option. With the

[1] DOE GTCC-like waste includes DOE-owned or generated LLW or transuranic waste having characteristics similar to GTCC LLW which may not have an identified path to disposal.

exception of the nuclear utilities waste, the projected volumes presented in Table 1 and throughout this report are an estimate of the waste volumes that will be generated between 2005 and 2035. For activated metal waste from the nuclear utilities, the projected volume is an estimate of the waste volume that will be generated between 2035 and 2062. The 2062 date was chosen for the nuclear utilities waste to allow for a 60-year operational period (a 40-year initial license with a 20-year license renewal) plus a six-year cooling period for each of the 104 operating nuclear power plants (as of 2005) in the United States. The anticipated volume is the sum of the stored and projected volume.

Table 1. Summary of GTCC LLW and DOE GTCC-like Waste Volumes[a]

Waste Stream ID	Waste type	In storage		Projected		Total stored and projected	
		(U.S. DOE 2007a) Volume (m^3)	Volume from this report (m^3)	(U.S. DOE 2007a) Volume m^3	Volume from this report (m^3)	(U.S. DOE 2007a) Volume (m^3)	Volume from this report (m^3)
GTCC LLW							
1	Activated metal[b]	58	58.53	810	823.38	870	881.91
2a + 2c	Sealed sources[c]	(d)	(d)	1,700	1670.5	1,700	1,670.5
4a +4c	Other waste[e]	76	76.0	1.0	1.00	77	77
	Total GTCC LLW	130	134.53	2,500	2,494.9	2,600	2,629.4
DOE GTCC-like waste							
3	Activated metal[f]	5.0	4.95	29	28.7	34	33.7
2b + 2d	Sealed sources[g]	8.7	8.73	25	24.77	34	33.5
4b + 4d	Other[h]	860	1,102.61	2,000	2,617.35	2,900	3,719.96
	Total DOE GTCC-like waste	870	1,116.29	2,100	2,670.82	2,900	3,787.11
	Total GTCC and GTCC-like waste	1,000	1,250.82	4,600	5,165.72	5,600	6,416.54

[a]All values from U.S. DOE 2007a have been rounded to two significant figures. Totals may not equal sum of components due to independent rounding. Stored waste is waste that was generated prior to 2005. Projected waste is waste that will be generated between 2005 and 2035 (or between 2035 and 2062 for the nuclear utilities waste); [b]Discrepancies between U.S. DOE (2007a) and the values reported here result in part from rounding. In addition the more detailed analysis of Schelling et al. (2007) (Appendix H) that supports this report uncovered an additional twenty-three m^3 in the projected category for this waste. Volumes for this waste are packaged volumes; [c]Discrepancies between U.S. DOE (2007a) and the values reported here result from rounding. Volumes for this waste are packaged volumes; [d]NRC licensees currently possess sealed sources that may become GTCC LLW when no longer needed by the licensee; the estimated volume and activity of those sources are included in the projected inventory; [e]Volumes for this waste are packaged volumes; [f]Discrepancies between U.S. DOE (2007a) and the values reported here result from rounding. Volumes for this waste are unpackaged volumes; [g]Discrepancies between U.S. DOE (2007a) and the values reported here result from rounding Volumes for this waste are packaged volumes; [h]Discrepancies between U.S. DOE (2007a) and the values reported here result in part from rounding. In addition, the more detailed analysis of Leigh et al. (2007) (Appendix F) that supports this report revealed that 100 m^3 of stored waste was reported as unpackaged but was added to packaged volumes to give the results reported in U.S. DOE (2007a). The value reported here is for packaged volumes and a packaging assumption was made for the unpackaged 100 m^3 in Leigh et al. (2007) to get the total packaged volume. In addition, volumes were updated by WVDP in April of 2008 (Bohan 2008), see Trone (2008) Appendix F.

Table 2 provides a summary of the waste activity for GTCC LLW and DOE GTCC-like waste from the 2007 inventory update (U. S. DOE 2007a).

Table 2. Summary of GTCC LLW and DOE GTCC-like Waste Activities[a]

Waste Stream ID	Waste type	In Storage Activity (MCi)	Projected Activity (MCi)	Total stored and Projected Activity (MCi)
GTCC LLW				
1	Activated metal[b]	3.5	110	110
2a + 2c	Sealed sources[c]	(d)	2.4	2.4
4a + 4c	Other waste	0.0076	<0.001	0.0078
	Total GTCC LLW	3.5	110	110
DOE GTCC-like waste				
3	Activated metal	0.11	0.82	0.93
2b + 2d	Sealed sources[c,d]	0.013	0.030	0.043
4b + 4d	Other [e]	11	19	30
	Total DOE GTCC-like waste	11	20	31
	Total GTCC and GTCC-like waste	15	130	140

[a]All values are from U.S. DOE (2007a) and have been rounded to two significant figures. Totals may not equal sum of components due to independent rounding. Total activities are not calculated in this report. Only activities of individual radionuclides are calculated. Stored waste is waste that was generated prior to 2005. Projected waste is waste that will be generated between 2005 and 2035 (or between 2035 and 2062 for the nuclear utilities waste); [b]Activities for the projected inventory estimated at six years following reactor shutdown. Activities for the stored inventory have been decayed to 2007. The year 2062 was used for the overall nuclear utility GTCC LLW projections in order to include the 20-year license renewal that a number of commercial nuclear reactors are likely to receive and a minimum six-year cooling period before the waste would be available for disposal. Waste from operating reactors is assumed to start becoming available in 2035; waste from six reactors, accounting for 51.9 m^3 and $6.7x10^{+6}$ Ci, will become available after 2055. [c]Sealed source activities estimated as of January 1, 2007. [d]NRC licensees currently possess sealed sources that may become GTCC LLW when no longer needed by the licensee; the estimated volume and activity of those sources are included in the projected inventory. [e]WVDP did not report the total activity as part of their 2008 update (Bohan 2008) to the WVDP Other waste streams, therefore this table does not reflect the change in total activity as a result of the update.

1.2 PURPOSE

The focus of the upcoming GTCC LLW disposal EIS is to evaluate the potential environmental impacts from the construction, operation, closure and post-closure performance of a disposal facility for GTCC LLW and potentially DOE GTCC-like waste. This document summarizes the basis inventory for use in preparation of the EIS. It provides a more detailed formulation of information from the DOE 2007 inventory update (U. S. DOE 2007a), supplying inventory-related data which were identified in the Task 3.5 data requirements document and in planning efforts for this task (SNL 2006).

Figure 1 shows how the results presented in this document are related to other documents being produced in support of the EIS.

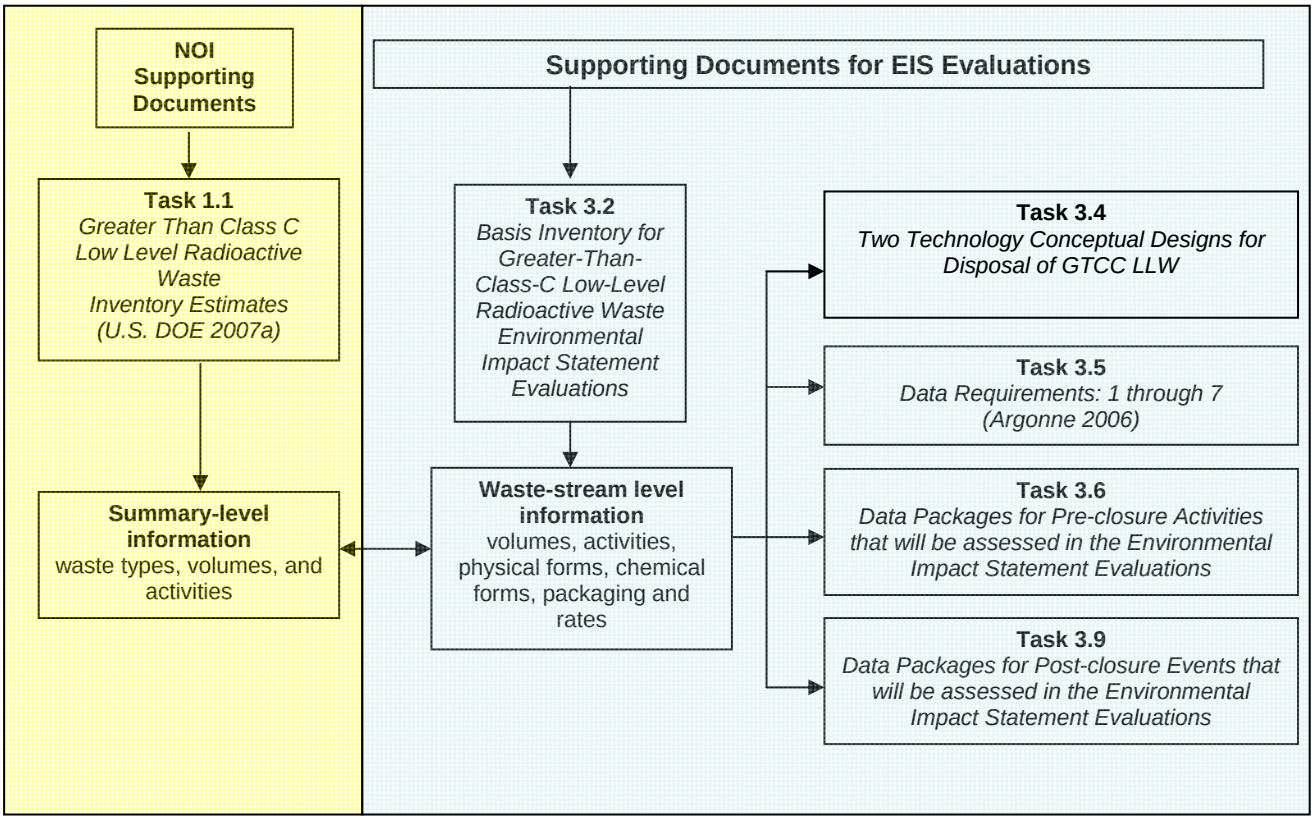

Figure 1. Relationship Among Tasks Supporting the GTCC LLW EIS

This basis inventory has been formulated solely for use in preparing the EIS. Of necessity, a number of assumptions, which are documented in this report, have been made while developing this basis inventory. The result is an inventory for the GTCC LLW EIS that represents a reasonable estimate of the inventory for disposal of GTCC LLW and DOE GTCC-like waste at a level of detail commensurate with the data required for EIS evaluations.

1.3 METHODS AND ASSUMPTIONS

The methods and assumptions used to prepare the information presented in this report are discussed separately below for each of the wastes identified in Table 1. For each of these wastes, the following sections describe the estimation of volumes, chemical and physical forms, radionuclide activities, waste packages, shipping containers, disposal packages, and possible generation rates. Section 2 describes the GTCC LLW activated metal from nuclear utilities, which comprises waste stream 1. Section 3 describes the sealed sources both from the commercial sector and from the DOE, which comprise waste streams 2a through 2d. Section 4 describes the DOE GTCC-like activated metals (waste stream 3), and Section 5 describes the GTCC LLW and DOE GTCC-like wastes that have not been discussed in any of the previous sections (waste streams 4a through 4d).

2. NUCLEAR UTILITY GTCC LLW ACTIVATED METAL

The 2007 inventory update (U. S. DOE 2007a) describes the method used to estimate the inventory of GTCC LLW from nuclear utilities. The estimates are based on scaling factors derived from analyses of the decommissioning of a reference boiling water reactor (BWR) and a reference pressurized water reactor (PWR). Similar scaling factors are presented in *Integrated Data Base Report – 1994: U.S. Spent Nuclear Fuel and Radioactive Waste Inventories, Projections, and Characteristics," Rev. 11* (DOE/RW-0006) (U. S. DOE 2001). Other reactor decommissioning data from the Electric Power Research Institute (EPRI) and other sources support these inventory estimates (EPRI 2003b; EPRI 2003a; EPRI 2005). This information is relevant to estimating transportation needs and in sizing disposal facilities.

2.1 ESTIMATED VOLUMES

The total packaged volume of GTCC LLW for a PWR or BWR at shutdown is estimated using the DOE/RW-0006 method by multiplying the reactor operating capacity by the volume scaling factor for either the reference PWR [9.40E-03 m^3/MW(e)] or reference BWR [6.03E-03 m^3/MW(e)][2]. Plant operating capacities were obtained from the Energy Information Administration (EIA) website (EIA 2005). PWR operational capacities ranged from 476 to 1,335 MW(e), with an average of 956 MW(e) and median of 985 MW(e). BWR operational capacities ranged from 506 to 1,263 MW(e), with an average of 949 MW(e) and median of 1,026 MW(e). The estimated packaged volume totals of GTCC LLW for the reactors included in this analysis are shown in Table 3 (Schelling et al. 2007a) (Appendix H).

Table 3. Stored and Projected Nuclear Utility GTCC LLW Volumes[a]

Category	Number of Reactors	GTCC LLW Packaged Volume (m^3)
Stored (BWRs)	7	7.07
Stored (PWRs)	9	51.46
Subtotal Stored	**16**	**58.53**
Projected (BWRs)	35	201.60
Projected (PWRs)	69	621.78[b]
Subtotal Projected	**104**	**823.38[b]**
Total	**120**	**881.91[b]**

[a]From Schelling et al. (2007a) (Appendix H); [b]U.S. DOE (2007a) indicates a total volume of 871m^3. Detailed analyses presented in Schelling et al. (2007) (Appendix H) that support this report uncovered an additional twenty-three cubic meters in the projected category for this waste.

[2] The volume scaling factors are slightly different from the values of 9.36E-03 m^3/MW(e) and 5.93E-03 m^3/MW(e) shown in U. S. DOE U. S. DOE (1995). Integrated Data Base Report - 1994: U.S. Spent Nuclear Fuel and Radioactive Waste Inventories, Projections, and Characteristics. DOE/RW-0006 Rev. 11. United States Department of Energy Office of Environmental Management.

2.2 CHEMICAL AND PHYSICAL FORMS

The nuclear utility GTCC LLW is steel or stainless steel materials subjected to neutron flux for long periods of time, causing activation of impurities in the metal. These materials are typically highly radioactive, with the initial radioactivity decreasing rapidly due to the decay of short-lived radionuclides. The activated metals are relatively both chemically and physically inert.

2.3 ESTIMATED ACTIVITIES

The total activity for GTCC LLW components of a PWR or BWR at shutdown is estimated using the DOE/RW-0006 method by multiplying the reactor operating capacity by the activity scaling factor for either the reference PWR [3.65E+03 Ci/MW(e)] or reference BWR [5.97E+03 Ci/MW(e)][3]. Estimated activities for GTCC LLW for all of the reactors included in this analysis at shutdown and time of availability (2019 for shutdown reactors and following sixty years of operation and a six year cooling period for operational reactors) are shown in Table 4 (Schelling et al. 2007a) (Appendix H). Plant operating capacities used the information from the Energy Information Administration (EIA) website (EIA 2005).

Table 4. Nuclear Utility GTCC LLW Total Activity at Shutdown and at Availability[a]

Category	# Reactors	Activity at Shutdown (Ci)	Activity at Time of Availability (Ci)
Stored (BWRs)	7	7.01E+06	2.19E+05
Stored (PWRs)	9	2.00E+07	1.15E+06
Subtotal Stored	**16**	**2.70E+07**	**1.37E+06 (3.5MCi)[b]**
Projected (BWRs)	35	2.00E+08	3.07E+07
Projected (PWRs)	69	2.42E+08	7.68E+07
Subtotal Projected	**104**	**4.42E+08**	**1.08E+08 (110 MCi)[c]**
Total	**120**	**4.69E+08**	**1.08E+08 (110 MCi)**

[a]From Schelling et al. (2007) (Appendix H). Activity in this table is a subtotal of eight tracked radionuclides which gives a reasonable estimate of the total activity after six years of cooling; [b]Activity at availability in this report is the activity at 2019. U.S. DOE (2007a) Table ES.1 reports a total stored value of 3.5 MCi which is the value at 2007; [c]U.S. DOE (2007a) reports 110 MCi which is the rounded value for projected activity at the time of availability.

In developing the estimating factors, DOE/RW-0006 assumes 30 Effective Full Power Years (EFPY) of operation over the initial 40-year license period. In reality, reactors that have been shutdown were not typically operated for that length of time. Most of the reactors still operating will operate for more than 40 years, and reactors in recent years have been operated at greater than 75% efficiency. These uncertainties are not expected to have a significant impact on the results of the analysis for the following reasons. As described in NUREG-1437 (NRC 1996a), extending operational life does not appreciably increase radioactivity level at shutdown, because shorter-lived radionuclides reach an equilibrium concentration after about 20 years of operation,

[3] The activity scaling factors are slightly different from the values of 4.07E-03 Ci/MW(e) and 5.45E-03 Ci/MW(e) shown in U. S. DOE Ibid.

and the increase in concentration of longer-lived radionuclides is a very small fraction of the total activity at shutdown. Therefore, no corrections were made in this analysis for these factors.

2.3.1 Activity of GTCC LLW from PWRs

As discussed above, scaling factors are used to estimate total activities of GTCC LLW from decommissioned PWRs. To estimate individual radionuclide activities from the total activity for PWRs, Table C.1-3 from the NRC document, *Technology, Safety, and Costs of Decommissioning a Reference Pressurized Water Reactor Power Station* (NUREG/CR-0130) (NRC 1978) is used as a basis for calculation. NUREG/CR-0130 provides a detailed evaluation of the decommissioning of the reference PWR, the 1175 MW(e) Trojan plant, and was used in developing the scaling factors.

There are 69 operational and ten[4] shutdown PWRs included in this analysis. Table C.1-3 of NUREG/CR-0130 gives the radionuclide concentrations in major activated reactor components for the reference PWR at the time of reactor shutdown. The PWR components considered to be GTCC LLW (U. S. DOE 2007a) include the core shroud, the lower 4.72 m of the core barrel, the thermal shields, and the upper and lower grid plates.

There are a large number of radionuclides in GTCC LLW when the reactor is shutdown. The analysis in NUREG/CR-0130 used initial natural abundances of 53 isotopes and nominal handbook material compositions as a starting point for neutron activation calculations. NUREG/CR-0130 Table C.1-3 shows the resulting activity concentrations for the major activated components for thirteen isotopes having half-lives greater than thirty five days; shorter half-life isotopes decay rapidly and have little impact on decommissioning. Five short-lived radionuclides, ^{58}Co, ^{59}Fe, ^{65}Zn, ^{95}Nb, and ^{95}Zr, were not considered further in this analysis, because their low initial concentration and rapid decay did not make a significant contribution to the activity after about five years of decay time. ^{60}Co and ^{55}Fe dominate the inventory and the dose initially, but with 5.27 year and 2.7 year half-lives respectively, they diminish rapidly and are not considered to be large contributors to dose at later times. Several other radionuclides have much longer half-lives and are present in sufficient concentration to provide long-term dose considerations. For these reasons, of the radionuclides considered in Table C.1-3 of NUREG/CR-0130, the more significant radionuclides for this analysis are ^{14}C, ^{54}Mn, ^{55}Fe, ^{59}Ni, ^{60}Co, ^{63}Ni, ^{93}Mo, and ^{94}Nb.

The individual radionuclide activities at the time of shutdown for the PWR components considered to be GTCC LLW are estimated using Equation 1, which is derived from the discussion of Table C.1-3 in NUREG/CR-0130.

$$A_{ic} = f_c \cdot D_{ic} \cdot V_c \qquad (1)$$

A_{ic} is the activity of the isotope (i) in the PWR component (c); D_{ic} is the peak activity concentration (Ci/m^3) of the isotope in the component from Table C.1-3 of NUREG/CR-0130;

[4] The Trojan PWR was decommissioned without the generation of GTCC LLW, and it was therefore excluded from further consideration in this analysis.

f_c is the average to peak ratio for each component from Table C.1-3 of NUREG/CR-0130; and V_c is the volume of the component.

Table C.1-3 of NUREG/CR-0130 does not give isotopic breakdowns for the upper and lower grid plates, but indicates their activity concentration is normalized to the shroud. Assuming the fractional radionuclide distribution is the same for the two grid plate components as for the shroud, the radionuclide distribution for the grid plates is calculated using Equation 1 with the shroud value for D_{ic}.

Activity distributions for other PWRs are estimated by scaling the results for the reference PWR using the reference PWR activity scaling factor. If $A_{i,ref}$ is the activity of isotope *i* at the time of reactor shutdown for the reference PWR, then $A_{i,j}$, the activity of isotope *i* at the time of reactor shutdown for reactor *j*, is given by Equation 2.

$$A_{i,j} = S_{ref} \cdot [C_j] \cdot [A_{i,\,ref} / \sum A_{i,ref}] \qquad (2)$$

In Equation 2, C_j is the operating capacity of PWR *j* in MW(e), and S_{ref} is the scaling factor of 3.65E+03 Ci/MW(e) for PWRs.

For the 69 operational PWRs included in this analysis, it is assumed that GTCC LLW waste from nuclear utilities becomes available for disposal after sixty years of operation followed by a six-year cooling period. Therefore, radionuclide activities at the time the waste becomes available for disposal will be the values at shutdown that are decayed for six years using the standard decay equation:

$$A(t) = A_0\, e^{-\ln(2)\, t\, /\, \tau} \qquad (3)$$

where A(t) is the activity in curies at time t (the decay time), A_0 is the initial activity at the time of reactor shutdown, and τ is the half-life (KAPL 2002). This formulation of Equation 3 only shows the decay term as the production term (i.e., ingrowth) for the radionuclides being considered here is zero.

The 2007 inventory update (U. S. DOE 2007a) includes information on ten PWRs that have already been shutdown (NRC 2006). For these ten reactors, it is assumed that the GTCC LLW disposal facility becomes available in 2019, and the radionuclide activities are decayed from the year of shutdown to 2019, using Equation 3.

Radionuclide activities for both operational and shutdown PWRs at the time of reactor shutdown and when the GTCC LLW becomes available for disposal are shown in Table 5 (Schelling et al. 2007a) (Appendix H).

2.3.2 Activity of GTCC LLW from BWRs

As was done for PWRs above, scaling factors are used to estimate total activities of GTCC LLW from decommissioned BWRs. To estimate individual radionuclide activities from the total activity, Table E.1-1 from the NRC document, *Technology, Safety, and Costs of*

Decommissioning a Reference Boiling Water Reactor Power Station (NUREG/CR-0672) (NRC 1980) is used as a basis for calculation. NUREG/CR-0672 provides a detailed evaluation of the decommissioning of the reference BWR, the 1155 MW(e) Columbia Generating Station, and was used in developing the scaling factors.

There are 35 operational and eight[5] shutdown BWRs included in this analysis. Table E.1-1 of NUREG/CR-0672 gives the peak radioactivity level in major activated reactor components for the reference BWR at the time of reactor shutdown. The BWR component considered to be GTCC LLW is the core shroud (NRC 1980).

NUREG/CR-0672 Table E.1-1 shows activity concentrations for thirty-four radionuclides for the reference BWR analysis. Most of the radionuclides have low initial concentrations or decay rapidly enough to make an insignificant contribution to the activity after about a five year decay time. ^{60}Co and ^{55}Fe dominate the inventory and the dose initially, but with 5.27 year and 2.7 year half-lives respectively, they diminish rapidly and are not considered to be large contributors to dose at later times. The remaining radionuclides have much longer half-lives and are present in sufficient concentration to provide long-term dose considerations. For these reasons, of the radionuclides considered in Table E.1-1 of NUREG/CR-0672, the more significant radionuclides for this analysis are ^{14}C, ^{54}Mn, ^{55}Fe, ^{59}Ni, ^{60}Co, ^{63}Ni, ^{93}Mo, and ^{94}Nb.

For the reference 1155 MW(e) Columbia Generating Station, the core shroud had a volume of 4.1 m^3. The radionuclide activity values at shutdown were calculated for the reference BWR by multiplying the activity concentrations from Table E.1-1 of NUREG/CR-0672 by the core shroud volume and an average/peak fraction. As was done for PWRs above, activity distributions for other BWRs are estimated using Equation 2 to scale the results for the reference BWR using the BWR activity scaling factor or 5.97E+03 Ci/MW(e).

For the 35 operational BWRs included in this analysis, it is assumed that GTCC LLW waste from nuclear utilities becomes available for disposal after sixty years of operation, followed by a six-year cooling period. Therefore, radionuclide activities at the time the waste becomes available for disposal will be the values decayed for six years using Equation 3.

The 2007 inventory update also includes information on eight shutdown BWRs (U. S. DOE 2007a). For these eight reactors, it is assumed that the GTCC LLW disposal facility becomes available in 2019, and the radionuclide activities are decayed from the year of shutdown to 2019.

Radionuclide activities for both operational and shutdown BWRs at the time of reactor shutdown and when the GTCC LLW becomes available for disposal are shown in Table 5 (Schelling et al. 2007a) (Appendix H).

[5] The Shoreham BWR was never operational and was decommissioned without the generation of GTCC LLW and was therefore excluded from further consideration in the analysis.

Table 5. Nuclear Utility GTCC LLW Activity at Shutdown and at Time of Availability[a]

Category	^{14}C	^{54}Mn	^{55}Fe	^{59}Ni	^{60}Co	^{63}Ni	^{93}Mo	^{94}Nb
Time of Shutdown (Ci)								
Stored BWRs	2.58E+02	2.09E+04	2.26E+06	1.56E+03	8.25E+05	2.15E+05	8.00E-01	3.68E+00
Stored PWRs	1.16E+03	4.73E+05	9.99E+06	6.18E+03	7.19E+06	9.36E+05	6.67E+00	3.71E+01
Subtotal Stored	**1.42E+03**	**4.94E+05**	**1.22E+07**	**7.74E+03**	**8.01E+06**	**1.15E+06**	**7.47E+00**	**4.08E+01**
Projected BWRs	7.34E+03	5.95E+05	6.45E+07	4.45E+04	2.35E+07	6.12E+06	2.28E+01	1.05E+02
Projected PWRs	1.40E+04	5.71E+06	1.21E+08	7.47E+04	8.68E+07	1.13E+07	8.06E+01	4.49E+02
Subtotal Projected	**2.14E+04**	**6.31E+06**	**1.85E+08**	**1.19E+05**	**1.10E+08**	**1.74E+07**	**1.03E+02**	**5.54E+02**
Total at Shutdown	**2.28E+04**	**6.80E+06**	**1.97E+08**	**1.27E+05**	**1.18E+08**	**1.86E+07**	**1.11E+02**	**5.95E+02**
Time of Availability (Ci)								
Stored BWRs	2.57E+02	5.03E-04	6.81E+03	1.56E+03	3.41E+04	1.77E+05	7.96E-01	3.68E+00
Stored PWRs	1.16E+03	8.56E-03	2.88E+04	6.18E+03	3.21E+05	7.89E+05	6.64E+00	3.71E+01
Subtotal Stored	**1.42E+03**	**9.06E-03**	**3.57E+04**	**7.74E+03**	**3.55E+05**	**9.65E+05**	**7.44E+00**	**4.08E+01**
Projected BWRs	7.34E+03	4.59E+03	1.41E+07	4.45E+04	1.07E+07	5.87E+06	2.28E+01	1.05E+02
Projected PWRs	1.40E+04	4.41E+04	2.63E+07	7.47E+04	3.95E+07	1.09E+07	8.05E+01	4.49E+02
Subtotal Projected	**2.14E+04**	**4.87E+04**	**4.04E+07**	**1.19E+05**	**5.01E+07**	**1.67E+07**	**1.03E+02**	**5.54E+02**
Total at Availability	**2.28E+04**	**4.87E+04**	**4.04E+07**	**1.27E+05**	**5.05E+07**	**1.77E+07**	**1.11E+02**	**5.94E+02**

[a]From Schelling et al. (2007a). (Appendix H).

2.4 PACKAGES

Table 6 shows potential waste, shipping, and disposal packages for nuclear utility GTCC LLW.

Table 6. Package Descriptions for Nuclear Utility GTCC LLW

	Type	Materials	External Dimensions	Internal Dimensions	Internal Accommodations	Container Weight (lb)
Waste Packages						
All GTCC LLW from nuclear utilities	Canister[a]	ASTM A-516 grade 55, 60, or 70 grade carbon steel or A-276 or A-240 Type 304 or 304L stainless steel	110" long 28" od	108" long 26" id	0.94 m^3 of metal waste	3,020 (empty) 15,480 (full)
All GTCC LLW from nuclear utilities	Shielded Canister[a]	ASTM A-516 grade 55, 60, or 70 grade carbon steel or A-276 or A-240 Type 304 or 304L stainless steel	110" long 28" od	97.5" long 15.5" id	0.301 m^3 of metal waste	18,940 (empty) 22,940 (full)
All GTCC LLW from nuclear utilities	Half Shielded Canister[a]	ASTM A-516 grade 55, 60, or 70 grade carbon steel or A-276 or A-240 Type 304 or 304L stainless steel	55" long 28" od	45.4" long 18.4" id	0.197 m^3 of metal waste	8,280 (empty) 9,220 (full)
All GTCC LLW from nuclear utilities	RH Canister[b]	ASTM A-516 grade 55, 60, or 70 grade carbon steel or A-276 or A-240 Type 304 or 304L stainless steel	121" long 26" od	110" long 25" id	0.89 m^3 of metal waste	1,760 (empty) 6,308 (full)
Shipping Container[e]						
WIPP	CNS 3-55[c]	Given in Certificate 5805	133.75" high 50.5" od	111" high 36" id	1 half-shielded canister	70,000 (MGW) 9220 (MCW)
WIPP	RH 72B Cask[d]	Given in Certificate 9212	141.75" long 41.63" od	130" long 32" id	1 RH Canister	45,000 (MGW) 8,000 (MCW)

[a]All dimensions, materials and weights for this canister are assumed based on dimensions, materials and weights of canisters used for similar purposes. Internal volumes and container weights calculated in Hillesheim and Schermerhorn (2007b) (Appendix D); [b]http:www.wipp.energy.gov/library/rhwaste/rhapp-a.htm; [c](RAMPAC 2006). This transportation cask can accommodate one canister; [d] RH TRU 72B cask SA12, Table 1.2-1 (U. S. DOE 2006b); [e]Shipping containers listed in this table are mentioned because a shipping container like the one described could be used for transportation of the material from the generator to the disposal site. The shipping containers listed here are meant to be representative not necessarily prescriptive. A current certification for any one of the shipping containers would have to be maintained or obtained before shipping GTCC LLW.

Table 6. Package Descriptions for Nuclear Utility GTCC LLW (continued)

	Type	Materials	External Dimensions	Internal Dimensions	Internal Accommodations	Container Weight (lb)
Shipping Container						
YM Rep. - Rail	NAC-STC[f]	Given in Certificate 9235	193" long 99"od	165" long 71"id	1 TAD loaded with 3 canisters	260,000 (MGW) unknown (MCW)
Land disposal sites – Rail	NAC-STC[f]	Given in Certificate 9235	193" long 99"od	165" long 71"id	3 canisters or 3 shielded canisters	260,000 (MGW) unknown (MCW)
Land disposal sites –Truck	CNS 3-55[c]	Given in Certificate 5805	133.75" high 50.5" od	111" high 36" id	1 half-shielded canister	70,000 (MGW) 9220 (MCW)
Disposal Package						
WIPP	3-pack[g]	Stainless steel	55" high 56" ed	NA	3 half-shielded canisters	27,728 (full)
WIPP	RH Canister[h]	Stainless steel	121" long 26" od	NA	0.89 m^3 of waste	6,308 (full)
YM Repository	YM Package[i]	Not specified	212" long 66" od	NA	1 TAD loaded with 3 canisters	Not specified
Land disposal sites	3-pack	Stainless steel	110" high 56" ed	NA	3 canisters	46,560 (full)
Land disposal sites	3-pack	Stainless steel	110" high 56" ed	NA	3 shielded canisters	68,964 (full)
Land disposal sites	7-pack	Stainless steel	55" high 82" ed	NA	7 half-shielded canisters	64,680 (full)

[f](RAMPAC 2006). Canisters will be loaded into TADs (U. S. DOE 2007b) and one TAD will be loaded into a NAC-STC or similar transportation cask. The TAD can accommodate 3 canisters; [g]Containers of this size are disposed as 3-packs in WIPP (Moody 2007). "ed" is the emplacement diameter; [h]The RH canister would be placed individually in WIPP (http://www.wipp.energy.gov/library/rhwaste/rhapp-a.htm). The weight of the loaded RH canister was calculated in Trone and Hendren (2007) (Appendix J); [i]Disposal at the YM repository will involve placement of TADs in a "waste package" which serves as the disposal package for the YM repository. One TAD would be packaged in the disposal package for disposal at the YM repository.

2.4.1 Waste Packages and Locations

For this analysis, it is assumed that all of the GTCC LLW from nuclear utilities is packaged in stainless steel canisters with maximum outer dimensions of 28 inches diameter and a maximum of 121 inches long. Four of these canisters are proposed for consideration in the EIS: an unshielded canister 110 inches long, a shielded canister 110 inches long, a shielded canister 55 inches long, and the remote-handled (RH) canister used for WIPP that is 121 inches long. All of these containers, except for the RH canister, are hypothetical containers that would have to be built for disposal of GTCC LLW if a decision to use them is made. All dimensions, materials, and weights for these hypothetical canisters are assumed based on dimensions, materials, and weights of containers used for similar purposes.

The 110-inch unshielded canister, referred to as an Activated Metal Canister (AMC) throughout the remainder of this document, has inner dimensions of 26 inches diameter and 108 inches long. The available internal volume of this canister for waste would be 0.94 m^3. The empty weight of the canister is 3,020 lbs (1,370 kg or 1.51 tons). The full weight of the canister is estimated to be 15,480 lbs (7,039 kg or 7.74 tons). Internal dimensions, internal volumes, empty weights and full weights were calculated in Hillesheim and Schermerhorn (2007b) (Appendix D).

The 110-inch shielded canister, referred to as a Shielded Activated Metal Canister (SAMC) throughout the remainder of this document, has inner dimensions of 15.5 inches diameter and 97.5 inches long. The canister is fitted with a 5.25 inch lead (Pb) shield that reduces available internal volume for waste to 0.30 m^3. The thickness of Pb required for shielding was estimated in Weiner et al. (2007) (Appendix K). The empty weight of the canister is 18,940 lbs (8.607 kg or 9.47 tons). The full weight of the canister is estimated to be 22,940 lbs (10,425 kg or 11.47 tons). Internal dimensions, internal volumes, empty weights and full weights were calculated in Hillesheim and Schermerhorn (2007b) (Appendix D).

The 55-inch shielded canister, referred to as a Half Shielded Activated Metal Canister (h-SAMC) throughout the remainder of this document, has inner dimensions of 18.4 inches diameter and 45.4 inches long. The canister is fitted with a 3.825 inch lead (Pb) shield that reduces available internal volume for waste to 0.197 m^3. The thickness of Pb required for shielding was estimated in Leigh and Trone (2007) (Appendix G). The empty weight of the canister is 8,280 lbs (3,755 kg or 4.13 tons). The full weight of the canister is estimated to be 9,220 lbs (4,191 kg or 4.61 tons). Internal dimensions, internal volumes, empty weights and full weights were calculated in Leigh and Trone (2007) (Appendix G).

The RH canister used for WIPP has inner dimensions of 25 inches diameter and 110 inches long. The available internal volume of the canister for waste would be 0.89 m^3. However, the limit for the canister is 23 curies per liter and essentially the full volume for these canisters is on average 0.25 m^3 of metal waste. The empty weight of the canister is 1,760 lbs (800 kg or 0.88 tons). The full weight of the canister is estimated to be 6,308 lbs (2,867 kg or 3.15 tons). Internal dimensions, internal volumes and the empty weight are found in U.S. DOE (2006c). The full weight was calculated in Trone and Hendren (2007) (Appendix J).

Calculating the number of canisters needed to accommodate the waste from each individual power plant yields a total of 997 AMCs, or 2,988 SAMCs, or 12,796 h-SAMCs or 2,573 RH canisters of GTCC LLW from nuclear utilities that would require disposal (Schelling et al. 2007a) (Appendix H).

2.4.2 Shipping Containers

All shipping containers used for shipping GTCC LLW must meet the standards for Type B shipping containers; therefore, for this analysis, it is assumed that all GTCC LLW will be shipped in Type B shipping containers. For environmental impact assessment purposes, all Type B containers can be modeled as having the same impacts for both routine, incident-free transportation and transportation accidents (Sprung et al. 2001; U. S. DOE 2002). It is assumed that the canisters described in Section 2.4.1 meet the specifications for transportation in Type B shipping containers without additional reinforcement. In addition, any shipping container listed in this section is mentioned because a shipping container like the one described could be used for transportation of the material from the generator to the disposal site. The shipping containers listed here are meant to be representative not necessarily prescriptive. A current certification for any one of the shipping containers would have to be maintained or obtained before shipping GTCC LLW.

In some cases, interim storage of spent fuel and GTCC LLW canisters is being provided at the utilities in the NAC International Transportable Storage Container (NAC-STC). However, for transportation options that incorporate alternative shipping containers, it is assumed that the GTCC LLW canisters will be removed from the NAC-STCs and placed in the appropriate shipping container for shipment to the disposal site.

Type B shipping containers are large, heavy, and expensive, and will only be used for transportation in this analysis, not for disposal. This is a precedent that has already been set for WIPP and for the proposed YM repository. In this analysis, it is assumed that at all sites, the canisters containing the GTCC LLW will be transferred from the shipping container to either a disposal package or directly into the disposal facility without further packaging.

All of the shipping containers described below have a one-to-one ratio with the number of shipments. Only one cask is loaded onto a rail car, and only one cask is loaded onto a truck.

For WIPP, which does not currently use a rail option, shipment by truck would be necessary. Because of weight and size, AMCs and SAMCs cannot be transported to WIPP (truck shipments are limited by weight). Either h-SAMCs (contact-handled [CH] option) or RH canisters (RH option) must be used for disposal in WIPP. For the h-SAMC, the CNS 3-55 (RAMPAC 2006) could be used for truck shipments to WIPP. For RH canisters, the RH 72B cask (RAMPAC 2006) is used for truck shipments to WIPP. An estimate of the number of shipments to WIPP for the GTCC LLW waste from the nuclear utilities is 12,796 shipments if the h-SAMCs are used or 2,573 if the RH canisters are used (Schelling et al. 2007a) (Appendix H).

For the proposed YM repository, shipment by rail is necessary. A rail cask can be used for waste from all of the power plants that have rail access. Table 6 lists the NAC-STC (RAMPAC 2006) for this purpose. The NAC-STC is a rail cask that for environmental impact assessment purposes can represent the others. For the power plants that do not have rail access, it is assumed that they are required to transport their waste to the nearest rail yard for shipment to the proposed YM repository.

For shipment to the proposed YM repository, AMCs would be loaded into a Transportation, Aging and Disposal cask (TAD) which would then be loaded into the rail cask. AMCs are assumed for the YM repository option because shielding is not required for disposal. While a final design for the TAD has not been selected, the preliminary designs submitted by Energy Solutions (2007), Transnuclear, Inc. (TN 2007), and NAC International, Inc. (NAC 2007) are similar with an outside diameter for the TAD of 66 inches and a maximum length of 212 inches. Based on the expected TAD dimensions, three AMCS could fit in a TAD. In addition, TADs procurement information indicates that a transportation cask will be provided for the TADs that will allow one TAD per cask per railcar for shipment to the YM repository (NAC 2007). An estimate of the number of rail shipments to the proposed YM repository for the GTCC LLW waste from the nuclear utilities is 365 shipments, 365 TADs and 365 rail casks (Appendix E). The estimates in Appendix E are considered upper bounds for the number of TADs.

For the land disposal sites, AMCs and/or SAMCs can be transported by rail in three-packs using the NAC-STC rail cask. Using the h-SAMC, the CNS 3-55 (RAMPAC 2006) could be used for truck shipments to the land disposal sites. An estimate of the number of shipments to the land disposal sites for the GTCC LLW waste from the nuclear utilities is 365 shipments by rail if the AMC or SAMC (Appendix E) are used or 12,796 shipments by truck if the h-SAMCs are used (Schelling et al. 2007a) (Appendix H).

2.4.3 Disposal Packages

For disposal in WIPP there are two options: emplacement on the floor of a WIPP disposal room or emplacement in a borehole in the wall of a disposal room. Emplacement on the floor of a disposal room is a CH option and involves the use of h-SAMCs. The h-SAMCs would be bundled in three-packs and two three packs would be stacked on top of one another. This mirrors the emplacement configuration that is being suggested for shielded canisters for RH waste at WIPP (Moody 2007). Emplacement in a borehole in the wall of a disposal room is an RH option and involves the use of RH canisters. RH waste disposal has begun at WIPP, and disposal of RH canisters containing GTCC LLW from the nuclear utilities would be similar.

For disposal at all of the sites being considered in the EIS except the proposed YM repository, the AMCs or SAMCs would be disposed without being placed in an additional package in the disposal facility.

For disposal at the proposed YM repository, the waste would arrive at the site packaged in TADs, each containing three AMCs. The TADs would be unloaded from the rail casks and placed in a disposal package[6] before emplacement in the repository. Currently, disposal packages for use in the proposed YM repository are being designed, and the final designs have not been chosen. For the purposes of this analysis, it is assumed that the disposal package is basically the size of a TAD and is available for disposal of GTCC LLW from the nuclear utilities.

For disposal at the land disposal sites there are three options: emplacement of three-packs of AMCs, emplacement of three-packs of SAMCs, and emplacement of seven-packs of h-SAMCs.

[6] What is called the disposal package in this document is referred to as the waste package in YM documents.

Emplacement of three-packs of AMCs is an RH option. Emplacement of three-packs of SAMCs and seven-packs of h-SAMCs are CH options.

2.5 WASTE STREAMS

For further analysis, the activated metals from nuclear utilities were formulated into one waste stream as shown in Table 7.

Table 7. Nuclear Utility GTCC LLW Waste Streams

Waste Stream	Description	Generator Site	Radionuclides	Origin	Chemical Form	Physical Form
1	Activated Metal	Nuclear Utility Sites	^{14}C, ^{60}Co, ^{54}Mn, ^{55}Fe, ^{59}Ni, ^{63}Ni, ^{94}Nb, ^{93}Mo, and others	Neutron activation of stainless steel	Stainless Steel	Solid metal

2.5.1 Generation Rates

Eighteen of the power plants considered in this analysis are shutdown (ten PWRs and eight BWRs). The GTCC LLW from these reactors (with the exception of one PWR and one BWR decommissioned without having generated any GTCC LLW) is in storage, waiting to be shipped once a disposal facility becomes operational. It is assumed that a facility becomes available for disposal in 2019.

Figure 2 shows the rate at which GTCC LLW from the nuclear utilities becomes available for disposal assuming a 60-year operational lifetime for each power plant and a six year cooling period before waste is available for disposal (Schelling et al. 2007a) (Appendix H). Given this assumption, GTCC LLW from currently operating reactors would become available for disposal starting in 2035, with the last volume of waste becoming available in 2062. A peak of GTCC LLW from 15 reactors becomes available for disposal in 2040. An average of GTCC LLW from four reactors per year becomes available for disposal.

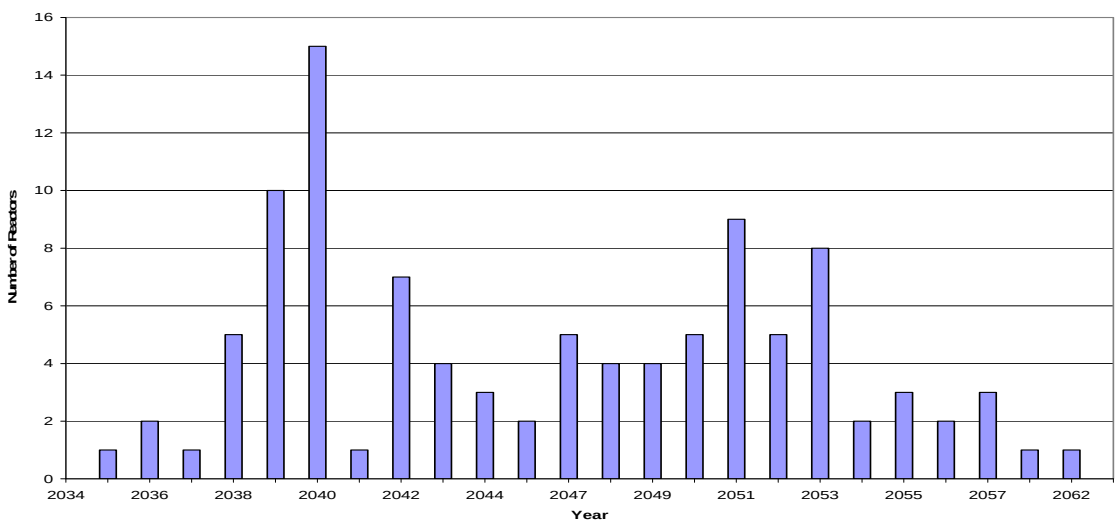

Figure 2. Distribution of Nuclear Power Plant Shutdown Dates Assuming 60 Years of Operation

2.5.2 Numbers of Containers

The stored and projected waste stream volumes and number of containers for the nuclear utility GTCC LLW waste stream identified in Section 2.5 are shown in Table 8. These are summary values from the information given in Schelling et al. (2007a) (Appendix H). The stored waste stream volume is the estimated volume of GTCC LLW from shutdown reactors. The projected volumes are assumed to become available from reactors starting in 2035 and continuing through 2062.

Table 8. Nuclear Utility GTCC LLW Waste Stream Volumes and Number of Containers[a, b]

Category	Number of Reactors	Number AMCs	Number SAMCs	Number h-SAMCs	Number RH Canisters
Stored BWRs	7	12	28	14	8
Stored PWRs	9	59	175	266	63
Subtotal Stored	**16**	**71**	**203**	**280**	**71**
Projected BWRs	35	234	689	2,671	538
Projected PWRs	69	692	2,096	9,845	1,964
Subtotal Projected	**104**	**926**	**2,785**	**12,516**	**2,502**
Total	**120**	**997**	**2,988**	**12,796**	**2,573**

[a]From Schelling et al. (2007a) (Appendix H); [b]The last four columns in this table represent four different packaging options. The values given represent the number of packages that would be produced if the waste were packaged in that particular waste package.

2.5.3 Container Activities

Average waste stream container activities for the GTCC LLW generated by nuclear utilities at the time the waste becomes available for disposal are given in Table 9. Activities per container (for AMC, SAMC, h-SAMCs and RH canisters) are listed for ^{14}C, ^{54}Mn, ^{55}Fe, ^{59}Ni, ^{60}Co, ^{63}Ni, ^{93}Mo, and ^{94}Nb.

Table 9. Nuclear Utility Stored and Projected Waste Activities Per Container at Time of Availability[a, b]

Category	^{14}C	^{54}Mn	^{55}Fe	^{59}Ni	^{60}Co	^{63}Ni	^{93}Mo	^{94}Nb
Average Activity Per AMC (Ci/container)								
Stored BWRs	2.14E+01	4.20E-05	5.68E+02	1.30E+02	2.84E+03	1.47E+04	6.63E-02	3.07E-01
Stored PWRs	1.96E+01	1.45E-04	4.89E+02	1.05E+02	5.44E+03	1.34E+04	1.13E-01	6.29E-01
Average of Stored	**1.99E+01**	**1.28E-04**	**5.02E+02**	**1.09E+02**	**5.00E+03**	**1.36E+04**	**1.05E-01**	**5.74E-01**
Projected BWRs	3.14E+01	1.96E+01	6.01E+04	1.90E+02	4.56E+04	2.51E+04	9.73E-02	4.48E-01
Projected PWRs	2.03E+01	6.38E+01	3.80E+04	1.08E+02	5.70E+04	1.57E+04	1.16E-01	6.48E-01
Average of Projected	**2.31E+01**	**5.26E+01**	**4.36E+04**	**1.29E+02**	**5.41E+04**	**1.81E+04**	**1.12E-01**	**5.98E-01**
Average of Total	**2.29E+01**	**4.89E+01**	**4.05E+04**	**1.27E+02**	**5.06E+04**	**1.77E+04**	**1.11E-01**	**5.96E-01**
Average Activity Per SAMC (Ci/container)								
Stored BWRs	9.17E+00	1.80E-05	2.43E+02	5.57E+01	1.22E+03	6.31E+03	2.84E-02	1.31E-01
Stored PWRs	6.62E+00	4.89E-05	1.65E+02	3.53E+01	1.83E+03	4.51E+03	3.79E-02	2.12E-01
Average of Stored	**6.97E+00**	**4.46E-05**	**1.76E+02**	**3.81E+01**	**1.75E+03**	**4.76E+03**	**3.66E-02**	**2.01E-01**
Projected BWRs	1.07E+01	6.67E+00	2.04E+04	6.46E+01	1.55E+04	8.52E+03	3.31E-02	1.52E-01

Projected PWRs	6.69E+00	2.11E+01	1.26E+04	3.56E+01	1.88E+04	5.18E+03	3.84E-02	2.14E-01
Average of Projected	**7.67E+00**	**1.75E+01**	**1.45E+04**	**4.28E+01**	**1.80E+04**	**6.01E+03**	**3.71E-02**	**1.99E-01**
Average of Total	**7.62E+00**	**1.63E+01**	**1.35E+04**	**4.25E+01**	**1.69E+04**	**5.92E+03**	**3.71E-02**	**1.99E-01**
Average Activity Per h-SAMC (Ci/container)								
Stored BWRs	1.83E+01	3.60E-05	4.87E+02	1.11E+02	2.44E+03	1.26E+04	5.68E-02	2.63E-01
Stored PWRs	4.35E+00	3.22E-05	1.08E+02	2.32E+01	1.21E+03	2.97E+03	2.50E-02	1.40E-01
Average of Stored	**5.05E+00**	**3.24E-05**	**1.27E+02**	**2.76E+01**	**1.27E+03**	**3.45E+03**	**2.66E-02**	**1.46E-01**
Projected BWRs	2.75E+00	1.72E+00	5.26E+03	1.67E+01	4.00E+03	2.20E+03	8.53E-03	3.93E-02
Projected PWRs	1.42+00	4.48E+00	2.67E+03	7.59E+00	4.01E+03	1.10E+03	8.18E-03	4.56E-02
Average of Projected	**1.71E+00**	**3.89E+00**	**3.23E+03**	**9.52E+00**	**4.01E+03**	**1.34E+03**	**8.25E-03**	**4.42E-02**
Average of Total	**1.78E+00**	**3.81E+00**	**3.16E+03**	**9.92E+00**	**3.95E+03**	**1.38E+03**	**8.65E-03**	**4.65E-02**
Average Activity Per RH Canister (Ci/container)								
Stored BWRs	3.21E+01	6.29E-05	8.52E+02	1.95E+02	4.26E+03	2.21E+04	9.95E-02	4.60E-01
Stored PWRs	1.84E+01	1.36E-04	4.58E+02	9.81E+01	5.09E+03	1.25E+04	1.05E-01	5.89E-01
Average of Stored	**1.99E+01**	**1.28E-04**	**5.02E+02**	**1.09E+02**	**5.00E+03**	**1.36E+04**	**1.05E-01**	**5.74E-01**
Projected BWRs	1.36E+01	8.54E+00	2.61E+04	8.27E+01	1.98E+04	1.09E+04	4.23E-02	1.95E-01
Projected PWRs	7.14E+00	2.25E+01	1.34E+04	3.80E+01	2.01E+04	5.53E+03	4.10E-02	2.28E-01
Average of Projected	**8.54E+00**	**1.95E+01**	**1.61E+04**	**4.76E+01**	**2.00E+04**	**6.69E+03**	**4.13E-02**	**2.21E-01**
Average of Total	**8.85E+00**	**1.89E+01**	**1.57E+04**	**4.93E+01**	**1.96E+04**	**6.88E+03**	**4.30E-02**	**2.31E-01**

[a]From Schelling et al. (2007a) (Appendix H); [b]Values in this table are averages calculated by dividing the total activity in that waste grouping by the number of containers. Ranges of individual container activities can be found in Schelling et al. (2007) (Appendix H).

2.5.4 Shipments, Shipping Containers, and Disposal Packages

The numbers of shipments, shipping containers, and disposal packages for the nuclear utility GTCC LLW waste stream are shown in Table 10. These are summary values from the information given in Schelling et al. (2007a) (Appendix H).

Table 10. Nuclear Utility GTCC LLW Waste Stream Shipments, Shipping Containers, and Disposal Packages[a, d]

Category	**Number of Rail Shipments[b]**		**Number of Truck Shipments[c]**	
	AMCs	**SAMCs**	**h-SAMCs**	**RH Canisters**
Stored BWRs	8	12	14	8
Stored PWRs	23	63	266	63
Subtotal Stored	**31**	**75**	**280**	**71**
Projected BWRs	90	241	2671	538
Projected PWRs	244	728	9845	1964
Subtotal Projected	**334**	**969**	**12516**	**2502**
Total	**365**	**1044**	**12796**	**2573**
	Number of Disposal Packages			
	3-packs of AMCs	**3-packs of SAMCs**		**3-packs of h-SAMCs**

Stored BWRs	8	12	9
Stored PWRs	23	63	94
Subtotal Stored	**31**	**75**	**103**
Projected BWRs	90	241	900
Projected PWRs	244	728	3303
Subtotal Projected	**334**	**969**	**4203**
Total	**365**	**1044**	**4306**
	Number of Disposal Packages		
	7-packs of h-SAMCs	**TADs/YM Disposal Packages**	**RH Canisters**
Stored BWRs	8	8	8
Stored PWRs	44	23	63
Subtotal Stored	**52**	**31**	**71**
Projected BWRs	392	90	538
Projected PWRs	1435	244	1964
Subtotal Projected	**1827**	**334**	**2502**
Total	**1879**	**365**	**2573**

[a]From Schelling et al. (2007a) (Appendix H); [b]One NAC-STC per railcar. Therefore, the number of shipping containers equals the number of shipments; [c]One CNS 3-55 or RH 72B cask per truck. Therefore, the number of shipping containers equals the number of shipments; [d]The columns in this table represent individual shipping and/or disposal options. The values in the columns represent the number of shipments that would be required if that particular shipping option was chosen or the number of disposal packages that would be produced if the waste was grouped in that particular disposal package.

3. SEALED SOURCE GTCC LLW AND DOE GTCC-LIKE WASTE

Sealed sources typically are small, high-activity radioactive materials encapsulated in closed metallic containers. The 2007 inventory update (U. S. DOE 2007a) reported information at a summary level for the expected volumes and activity levels for GTCC LLW and DOE GTCC-like sealed source wastes, as discussed in Section 1.1. Sealed source inventory information was obtained for the 2007 inventory update from the NRC Interim Sealed Source Database (ISSD), the DOE Radiological Source Registry and Tracking (RSRT) System Database, and forecasts of projected GTCC LLW sources based on source recovery rates from the Off-Site Source Recovery Project (OSRP) (Schelling 2006). The NRC ISSD included GTCC LLW sealed sources from NRC and Agreement State licensees possessing aggregate quantities of radionuclides in excess of International Atomic Energy Agency (IAEA) Category 2 thresholds (IAEA 2003). The NRC ISSD was used to estimate the inventory of commercial GTCC LLW sources containing ^{137}Cs and ^{244}Cm. Schelling and Trone (2007b) (Appendix I) lists the ^{244}Cm and ^{137}Cs commercial sources considered to be GTCC LLW.

The DOE RSRT System Database included only DOE sealed sources, some of which are similar to GTCC LLW, and was used to estimate the stored and projected inventory of DOE GTCC-like sealed sources. Schelling and Trone (2007b) (Appendix I) lists the DOE sources included in the inventory, which include ^{244}Cm, ^{240}Pu, ^{243}Am and ^{137}Cs sources.

Based on the OSRP annual forecast recovery rate, estimates of the projected inventory to 2035 of commercial ^{238}Pu, ^{239}Pu, and ^{241}Am GTCC LLW sources were made, assuming all are GTCC LLW prior to recovery and conservatively packaged as neutron sources (Schelling et al. 2007b) (Appendix I).

3.1 ESTIMATED VOLUMES

To develop realistic volume estimates, it was assumed that sealed sources (other than the ^{137}Cs sources as discussed below) will be packaged into 55-gallon drums by radionuclide based on packaging factor limits from the OSRP as shown in Table 11 (OSRP 2005). The volume estimate for sealed sources is the product of the number of packages and the package volume (0.208 m^3 for a 55-gallon drum). The resulting volume estimates are shown in Table 12. Sources were packaged using their activities decayed to 1/1/2007 as reported in the source databases (See Section 3.3 below.). Although some of the shorter-lived sources may decay below GTCC LLW levels by the time of disposal, this approach is used because of uncertainty in disposal system availability and for conservatism in estimating disposal system capacity.

The method mentioned above was applied to all of the sealed sources except for the ^{137}Cs sources. For the ^{137}Cs sources, an assumed packaged volume of 0.71m^3 (see Section 3.4.1 below) was applied for each of the 1,481 ^{137}Cs sources in the inventory for a total estimated volume of 1,052 m^3.

Table 11. Packaging Limits for Sealed Sources[a]

Name	Basis of Packaging Limit	Packaging Limit
DOT A1 Limit	The maximum activity of special form Class 7 (radioactive) material permitted in a Type A package (49 CFR 173.403). Special form materials include sealed sources. A shielded 55-gallon drum is a Type A package.	^{240}Pu: 270 Ci/drum ^{243}Am:140 Ci/drum ^{244}Cm: 540 Ci/drum.
Fissile Gram Limit	An isotopic mass of radionuclide normalized to ^{239}Pu (U. S. DOE 2005a).	^{239}Pu/Be neutron sources: 12.4 Ci/drum.
^{239}Pu Equivalent Limit	An equivalent radiotoxic hazard of a radionuclide normalized to ^{239}Pu. As a common component of most defense transuranic waste, ^{239}Pu was selected as the radionuclide to which the radiotoxic hazard of other transuranic radionuclides could be indexed (U. S. DOE 2005a).	^{238}Pu: 88 Ci/drum ^{241}Am: 80 Ci/drum
Contact Dose Limit	The limiting surface dose rate of 200 mrem/hr for contact handling (U. S. DOE 2005a).	100 mrem/hr ALARA limit estimated at 35 Ci/drum for neutron sources containing ^{241}Am or ^{238}Pu.

[a] U.S. DOE (2007a) Table 3.3.

Table 12. Number of 55-gallon Drums and Associated Volumes for GTCC LLW and DOE GTCC-like Sealed Sources[a]

Generator	Isotope	Number of Sources	Packaging Limit Applied (Ci/drum)	55-gallon Drums	Volume (m^3)[d]
Stored					
DOE	^{244}Cm[c]	13	540	1[b]	0.21
DOE	^{137}Cs	12	NA	NA	8.52
Projected					
Commercial	^{238}Pu/Be [b]	8,364	35	1,269	263.95
Commercial	^{239}Pu/Be [b]	1,819	12.4	270	56.16
DOE	^{240}Pu [b]	1	270	1	0.21
Commercial	^{241}Am/Be [b]	44,079	35	1,593	331.34
DOE	^{243}Am [b]	1	140	1	0.21
DOE	^{244}Cm[c]	7	540	1[b]	0.21
Commercial	^{244}Cm[c]	1	540	1	0.21
DOE	^{137}Cs[c]	34	NA	NA	24.14
Commercial	^{137}Cs[c]	1,435	NA	NA	1018.85
			Total	3,137	1,704.01

[a]From Schelling and Trone (2007b) (Appendix I); [b]Based on OSRP annual forecast recovery rates for commercial sources and on the RSRT for DOE sources; [c]Based on NRC ISSD for commercial sources and on the RSRT for DOE sources; [d]Calculated as the number of 55-gallon drums times the volume per drum (0.208 m^3 per drum).

3.2 CHEMICAL AND PHYSICAL FORMS

The specific chemical form of most of the sealed sources is unknown. Typically, these items are small cylinders, doubly-encapsulated in titanium or stainless steel, with the radioactive material present in one of several forms, including ceramic oxides, salts, or metal (SNL 2004). CsCl salt was used in older ^{137}Cs sources, although newer sources typically involve bonding the radioactive material in a ceramic. The CsCl salt is the more mobile form for ^{137}Cs when compared to cesium bonded in a ceramic. It is reasonable to assume the other nuclides are in the form of oxides. The oxides themselves are likely to be formed pellets.

3.3 ESTIMATED ACTIVITIES

Schelling and Trone (2007b) (Appendix I) show the activities decayed (using Equation 3) to 2007 and decayed to 2019 for the commercial ^{244}Cm sources from the NRC ISSD database. They also calculated the 2007 and 2019 activities for the DOE ^{244}Cm sources from the RSRT database. The activities decayed to 2007 and decayed to 2019 for the commercial ^{137}Cs sources from the NRC ISSD database and the 2007 and 2019 activities for the DOE ^{137}Cs sources from the RSRT database are also calculated in Schelling and Trone (2007b) (Appendix I). Since it is assumed that the disposal facility will become operational in 2019, radionuclide activities for sealed sources at 2019 are given. While some of the sources may be shipped after 2019, it is conservative to assume the 2019 activity for transportation analysis. Radioactive in-growth for transuranic sealed sources is not significant over the pre-closure time period, but should be accounted for in post-closure analyses for longer times. Table 13 shows the estimated activities for the sealed source wastes.

Table 13. Radionuclide Activities for GTCC LLW and DOE GTCC-like Sealed Sources[a]

Generator	Isotope	2007 Activity (Ci)	2019 Activity (Ci)
Stored			
DOE	^{244}Cm	9.87E+00	6.24E+00
DOE	^{137}Cs	1.29E+04	9.80E+03
		Stored Subtotal	9.80E+03
Projected			
Commercial	^{238}Pu/Be	NA	4.24E+04
Commercial	^{239}Pu/Be	NA	3.04E+03
DOE	^{240}Pu	2.21E+01	2.21E+01
Commercial	^{241}Am/Be	NA	5.55E+04
DOE	^{243}Am	3.52E-01	3.51E-01
DOE	^{244}Cm	4.87E+01	3.07E+01
Commercial	^{244}Cm	2.20E+01	1.39E+01
DOE	^{137}Cs	3.04E+04	2.31E+04
Commercial	^{137}Cs	2.34E+06	1.77E+06
		Projected Subtotal	1.80E+06
		Total	1.81E+06

[a]From Schelling and Trone (2007b) (Appendix I); [b]8,364 sources that are 5.07 Ci each (Schelling and Trone 2007); [c]1,819 sources that are 1.67 Ci each (Schelling and Trone 2007) (Appendix I); [d]44,079 sources that are 1.26 Ci each (Schelling and Trone 2007) (Appendix I).

3.4 PACKAGES

Table 14 shows potential waste, shipping, and disposal packages for GTCC LLW and DOE GTCC-like sealed sources.

3.4.1 Waste Packages and Locations

With the exception of large ^{137}Cs sources, it was assumed for this analysis that GTCC LLW and DOE GTCC-like waste sealed sources are packaged in 55-gallon drums. Further, the drums are filled by radionuclide according to the packaging limits shown in Table 11, based on guidance supplied by the OSRP.

Fifty-five-gallon drums going to the YM repository would have to be over-packed in a canister acceptable for disposal in the YM repository. It is assumed that the AMC described in Section 2.4.1 is suitable for this purpose. All dimensions, materials and weights for that canister are assumed based on dimensions, materials and weights of canisters used for similar purposes. Three 55-gallon drums can fit in an AMC. Therefore, it is assumed that if the waste is going to the YM repository, it will be loaded into AMCs prior to shipment and disposal.

Large ^{137}Cs sources cannot be packaged in 55-gallon drums; instead, it is assumed the ^{137}Cs sources will be disposed in their original shielded devices. Because the volume of most of these source devices is unknown, a volume of 0.71 m^3 was assumed representative. For the purposes of transportation and disposal analyses, the CIS-US Inc. Blood Irradiator Model IBL-437, which has a similar volume, was chosen to represent the ^{137}Cs sources (CIS-US 2006).

The stored inventory of ^{137}Cs sources includes twelve large DOE-owned ^{137}Cs sources (six at Bechtel-Jacobs Oak Ridge, one at Brookhaven National Laboratory, three at LANL, one at Pantex, and one at the Stanford Linear Accelerator Center). The projected inventory includes 34 large DOE-owned ^{137}Cs sources (3 at Brookhaven, 2 at Fermi, 5 at INL, 3 at LLNL, 7 at LANL, 2 at the Nevada Test Site, 2 at ORNL, 2 at Pacific Northwest National Laboratory, 1 at Pantex, and 7 at SNL) and 1,435 large NRC-licensed ^{137}Cs sources, for which no information on location is available.

3.4.2 Shipping Containers

All containers used for shipping GTCC LLW, must meet the standards for Type B shipping containers. For environmental impact assessment purposes, all Type B containers can be modeled as having the same impacts for both routine, incident-free transportation and transportation accidents (Sprung et al. 2001; U. S. DOE 2002). Therefore, the exact Type B shipping container is not being recommended here; instead a representative Type B shipping container that could be used for transportation is being described. In addition, any shipping container listed in this section is mentioned because a shipping container like the one described could be used for transportation of the material from the generator to the disposal site. The shipping containers listed here are meant to be representative not necessarily prescriptive. A current certification for any one of the shipping containers would have to be maintained or obtained before shipping GTCC LLW.

Type B shipping containers are large, heavy, and expensive, and will be used in this analysis only for transportation, not for disposal. This is a precedent that has already been set for WIPP and is being

recommended for the YM repository. In this analysis, it is assumed that at all sites, including the WIPP and the proposed YM repository, the waste packages (55-gallon drums containing sealed sources, canisters containing 55-gallon drums, or ^{137}Cs sources) will be transferred from the shipping container to either a disposal package or directly into the disposal facility without further packaging.

For WIPP, which does not currently use a rail option, shipment by truck would be necessary. The TRUPACT-II (U. S. DOE 2005b) can be used. Two 7-packs of drums or two ^{137}Cs sources can be transported in a TRUPACT-II, and up to three TRUPACT-IIs can be loaded on a truck for shipment to WIPP. An estimate of the number of truck shipments to WIPP for the sealed sources is 338 shipments or 976 TRUPACT-II.

For the proposed YM repository, shipment by rail is necessary. A rail cask that can be used for waste shipments is the NAC-STC (RAMPAC 2006). Fifty-five gallon drums would be loaded into AMCs which would be loaded into a TAD. Six ^{137}Cs sources can be loaded in a TAD. The TAD would then be loaded into the rail cask. While a final design for the TAD has not been selected, the preliminary designs submitted by Energy Solutions (Energy Solutions 2007), Transnuclear, Inc. (TN 2007), and NAC International, Inc. (NAC 2007) are similar with an outside diameter for the TAD of 66 inches and a maximum length of 212 inches. Based on the expected TAD dimensions, three AMCS can fit in a TAD. In addition, TADs procurement information indicates that a transportation cask will be provided for the TADs that will allow one TAD per cask per railcar for shipment to the YM repository (NAC 2007). An estimate of the number of rail shipments to the proposed YM repository for the sealed sources is 610 shipments (Appendix E). The estimates in Appendix E are considered upper bounds for the number of TADs.

For shipment to all of the land disposal sites either by rail or by truck, the CNS8-120B (RAMPAC 2006) can be used. This container will house four 55-gallon drums or two ^{137}Cs sources. An estimate of the number of shipments to the land disposal sites for the sealed sources using the CNS8-120B is 1536 shipments by rail or truck.

Table 14. Package Descriptions for GTCC LLW and DOE GTCC-like Sealed Sources

	Type	Materials	External Dimensions	Internal Dimensions	Internal Accommodations	Container Weight (lb)
Waste Package						
All GTCC LLW and DOE GTCC-like Sealed Sources that are not ^{137}Cs sources and are not going to the YM repository	55-gallon drum[a]	Carbon steel	35" long 24" od	33.25" long 22.5" id	0.208 m^3 of waste	65 (empty) <1,000 (full)
All GTCC LLW and DOE GTCC-like Sealed Sources that are not ^{137}Cs sources that are going to the YM repository	Canister[b]	ASTM A-516 grade 55, 60, or 70 grade carbon steel or A-276 or A-240 Type 304 or 304L stainless steel	110" long 28" od	108 " long 26" id	3 55-gallon drums or 0.624 m^3 of waste	3,020 (empty) 6,020 (full)
^{137}Cs Sources that are not going to the YM repository	CIS-US Inc. Blood Irradiator Model IBL-43[c]	Self-shielded – source in its own package	26.4" W 25.6" L 59.1" H	NA	NA	NA (empty) 4,700 (full)
^{137}Cs Sources that are going to the YM repository	TAD[d]	Not specified	212" long 66" od	Not specified	6 ^{137}Cs Sources per TAD	55,000 (empty) 83,200 (full)

[a]Based on the CH TRAMPAC, Revision 2, Section 2.1.1. (U. S. DOE 2006a), the gross weight for a 55-gallon drum is 1,000 pounds. Section 2.9.1 of the TRAMPAC lists the inside dimensions for the 55-gallon drum at 33 ¼" (H) X 22 ½" (W). The outside dimensions are 35" (H) X 24" (W). Hillesheim and Hendren (2007a) (Appendix C) calculate an empty drum weight of 65 lbs and a drum full of concrete with a weight of 1,163.14 lbs. For drums going to WIPP or the YM repository, void space is allowed and the drum weight is close to the drum weight of 65 lbs. For drums going to the land disposal sites, voids are not allowed and the full weight is closer to the weight of a drum full of concrete; [b]55-gallon drums going to the YM repository would have to be over-packed in a canister that is acceptable for disposal in the YM repository. It is assumed that the AMC described in Section 2.4.1 is suitable for this purpose. All dimensions, materials and weights for that canister are assumed based on dimensions, materials and weights of canisters used for similar purposes. Three 55-gallon drums can fit in a vessel with these inner dimensions Hillesheim and Schermerhorn (2007b) (Appendix D) calculate the empty weight of 3,020 lbs. The full weight of the AMC would be 6,020 lbs.; [c]The shielded ^{137}Cs sources are the waste package (CIS-US 2006); [d] ^{137}Cs sources going to the YM repository would be loaded directly into a TAD. 6 ^{137}Cs sources can fit in a TAD (Appendix E).

Table 14. Package Descriptions for GTCC LLW and DOE GTCC-like Sealed Sources (continued)

		Type	Materials	External Dimensions	Internal Dimensions	Internal Accommodations	Weight (lb)
Shipping Container[e]							
WIPP	All others	TRUPACT-II[f]	Certificate 9218	122” high 94”od	75” high 73” id	14 55-gallon drums	19,250 (MGW) 7,265 (MCW)
	^{137}Cs Sources	TRUPACT-II[f]	Certificate 9218	122” high 94” od	75” high 73” id	2 ^{137}Cs sources	19,250 (MGW) 7,265 (MCW)
YM Rep. - Rail	All others	NAC-STC[g]	Certificate 9235	193” long 99”od	165” long 71”od	1 TAD loaded with 3 AMCs	260,000 (MGW)Unknown (MCW)
	^{137}Cs Sources	NAC-STC[g]	Certificate 9235	193” long 99”od	165” long 71”od	1 TAD loaded with 6 ^{137}Cs sources	260,000 (MGW) Unknown (MCW)
All other sites – Rail	All others	CNS8-120B[h]	Certificate 9168	88” long 74” od	75” long 62” od	4 55-gallon drums	74,000 (MGW) 14,680 (MCW)
	^{137}Cs Sources	CNS8-120B[h]	Certificate 9168	88” long 74” od	75” long 62” od	2 ^{137}Cs sources	74,000 (MGW) 14,680 (MCW)
All other sites – Truck	All others	CNS8-120B[h]	Certificate 9168	88” long 74” od	75” long 62” od	4 55-gallon drums	74,000 (MGW) 14,680 (MCW)
	^{137}Cs Sources	CNS8-120B[g]	Certificate 9168	88” long 74” od	75” long 62” od	2 ^{137}Cs sources	74,000 (MGW) 14,680 (MCW)

[e]Shipping containers listed in this table are mentioned because a shipping container like the one described could be used for transportation of the material from the generator to the disposal site. The shipping containers listed here are meant to be representative not necessarily prescriptive. A current certification for any one of the shipping containers would have to be maintained or obtained before shipping GTCC LLW; [f]From the TRUPACT-II SAR, Revision 21, May 2005 (U. S. DOE 2005b). The TRUPACT-II holds 14 55-gallon drums. For this analysis, it is assumed that two ^{137}Cs waste packages will fit in a TRUPACT-II; [g](RAMPAC 2006). AMCs or ^{137}Cs sources will be loaded into TADs (U. S. DOE 2007b) and one TAD will be loaded into a NAC-STC or similar transportation cask. The TAD can accommodate 3 AMCs or 6 ^{137}Cs sources; [h](RAMPAC 2006). For sites other than the YM repository, it is assumed that 55-gallon drums are transported without overpacking. For this reason, a smaller rail cask was chosen. This rail cask can transport four 55-gallon drums or two ^{137}Cs sources at a time.

Table 14. Package Descriptions for GTCC LLW and DOE GTCC-like Sealed Sources (continued)

		Type	Materials	External Dimensions	Internal Dimensions	Internal Accommodations	Weight (lb)
Disposal Package							
WIPP	All others	seven-pack[h]	Carbon steel and shrink wrap	35” high 72” ed	NA	7 55-gallon drums per	NA (empty) 700 (full)
	^{137}Cs Sources	four-pack[h]	Self-shielded – source in its own package	52.8" W 51.2" L 59.1” H	NA	4 ^{137}Cs sources per	NA (empty) 18,800 (full)
YM Repository	All others	YM Disposal Package[i]	Stainless steel	212” 66” ed	NA	1 TAD loaded with 3 canisters	84,000
	^{137}Cs Sources	YM Disposal Package[i]	Stainless steel	>212” >66” ed	NA	1 TAD loaded with 3 canisters 6 ^{137}Cs sources	84,000
Land disposal sites	All others	seven-pack[k]	Stainless steel and shrink wrap	35” high 72” ed	NA	7 55-gallon drums per	420
	^{137}Cs Sources	four-pack	Self-shielded – source in its own package	52.8" W 51.2" L 59.1” H	NA	4 ^{137}Cs sources per	18,800

[1]Drums are placed in WIPP in 7-packs. The emplacement diameter, “ed”, of a 7-pack is 72”; The ^{137}Cs sources would be placed in four-packs in WIPP. The emplacement dimensions are 52.8” by 51.2” by 59.1”; [j]Disposal packages for use in the proposed YM repository are being designed, and the final designs have not been chosen (Energy Solutions 2007; NAC 2007; TN 2007). For purposes of this analysis, it is assumed that the disposal package is basically the size of a TAD; [k]Following the example set by WIPP, it is assumed that 55-gallon drums at the land disposal sites would be emplaced in groups of seven and ^{137}Cs sources would be placed in groups of four.

3.4.3 Disposal Packages

Disposal of CH 55-gallon drums in WIPP involves bundling the drums in units of seven (called a seven-pack). Seven-packs are stacked in a WIPP disposal room three in a stack. For disposal in WIPP, a seven-pack of 55-gallon drums is the disposal package for CH GTCC LLW and DOE GTCC-like sealed sources. Disposal of ^{137}Cs sources in WIPP would involve emplacing the shielded source devices in groups of four (four-packs) in the repository.

For disposal at the proposed YM repository, the waste would arrive at the site packaged in TADs, each containing three AMCs. The TADs would be unloaded from the rail casks and placed in a disposal package[7] before emplacement in the repository. Currently, disposal packages for use in the proposed YM repository are being designed, and the final designs have not been chosen (Energy Solutions 2007; NAC 2007; TN 2007). For the purposes of this analysis, it is assumed that the disposal package is basically the size of a TAD and is available for disposal of GTCC LLW from the nuclear utilities.

At the land disposal sites, disposal of (CH) 55-gallon drums could involve bundling the drums in seven-packs. Other packaging configurations are possible. For example, three-packs and four-packs could be used. However, there may be operational advantages to using the seven-pack with the conceptual designs are being developed by the project for the land disposal site. Disposal of ^{137}Cs sources would involve emplacing the shielded source devices in four-packs.

3.5 WASTE STREAMS

Sealed sources were formulated into four waste streams, as shown in Table 15, for further analysis: the DOE and commercial ^{137}Cs sources (2c and 2d) and DOE and commercial 55-gallon drums containing long-lived other sealed sources (2a and 2b), like ^{241}Am, ^{243}Am, ^{238}Pu, ^{239}Pu, and ^{240}Pu. All sealed sources are contact handled with the exception of possibly two sources in the ISSD.

Table 15. GTCC LLW and DOE GTCC-like Sealed Source Waste Streams

Waste Stream	Description	Generator Site	Origin	Chemical Form	Physical Form
2a	Commercial Sealed Sources other than ^{137}Cs Sources	Various	Manufactured	oxides	Likely pellet or ceramic; doubly encapsulated
2b	DOE Sealed Sources other than ^{137}Cs Sources	Various	Manufactured	oxides	Likely pellet or ceramic; doubly encapsulated
2c	Commercial ^{137}Cs Sources	Various	Manufactured	CsCl	Likely pelletized; doubly encapsulated
2d	DOE ^{137}Cs Sources	Various	Manufactured	CsCl	Likely pelletized; doubly encapsulated

3.5.1 Generation Rates

It is assumed that all sealed sources would become waste prior to 2035 and will be transferred to DOE at a steady rate throughout that period of time.

[7] What is called the disposal package in this document is referred to as the waste package in YM documents.

3.5.2 Waste Stream Volumes and Numbers of Containers

With the exception of a few DOE ^{244}Cm sources, all of the sealed sources that are not ^{137}Cs sources are in the projected volume of waste. All but twelve of the ^{137}Cs sources are also in the projected inventory (Schelling 2006). The resulting waste stream volumes and number of containers are shown in Table 16. The values in Table 16 are derived in Appendix A.

3.5.3 Waste Stream Activities

Table 17 shows the waste stream activities for the GTCC LLW and DOE GTCC-like sealed source waste streams in 2019. The radionuclide activities in Schelling and Trone (2007b) (Appendix I) were summed to obtain the activity at 2019.

3.5.4 Shipments, Shipping Containers, and Disposal Packages

The numbers of shipments, shipping containers, and disposal packages for the sealed source waste streams were calculated in Appendix A and are shown in Table 18.

3.5.5 Waste Stream Container Activities

Waste stream container activities are reported in Table 19.

Table 16. GTCC LLW and DOE GTCC-like Sealed Source Waste Stream Volumes and Containers[a, b]

Category	Volume (m^3)	Number 55-gallon drums[b]	Number ^{137}Cs Sources[c]	Number AMCs	Number TADs
Commercial Sealed Sources (2a)	0	0	NA	0	0
DOE Sealed Sources (2b)	0.21	1	NA	1	1
Commercial ^{137}Cs Sources (2c)	0	0	0	NA	0
DOE ^{137}Cs Sources (2d)	8.52	0	12	NA	5
Subtotal Stored	8.73	1	12	1	6
Commercial Sealed Sources (2a)	651.66	3,133	NA	1,045	349
DOE Sealed Sources (2b)	0.63	3	NA	3	3
Commercial ^{137}Cs Sources (2c)	1,018.85	NA	1,435	NA	240
DOE ^{137}Cs Sources (2d)	24.14	NA	34	NA	12
Subtotal Projected	1,695.28	3,136	1,469	1,048	604
Total	1,704.01	3,137	1,481	1,049	610

[a]From Appendix A; [b]The last two columns in this table represent two different packaging options. The values given represent the number of packages that would be produced if the waste were packaged in that particular waste package.

Table 17. GTCC LLW and DOE GTCC-like Sealed Source Waste Stream Activities[a]

Category	^{137}Cs	^{238}Pu	^{239}Pu	^{240}Pu	^{241}Am	^{243}Am	^{244}Cm
Stored Activity at 2019 (Ci)							
Commercial Sealed Sources (2a)	NA	0.00E+00	0.00E+00	0.00E+00	0.00E+00	0.00E+00	0.00E+00
DOE Sealed Sources (2b)	NA	0.00E+00	0.00E+00	0.00E+00	0.00E+00	0.00E+00	6.24E+00[c]
Commercial ^{137}Cs Sources (2c)	0.00E+00	NA	NA	NA	NA	NA	NA
DOE ^{137}Cs Sources (2d)	9.80E+03[b]	NA	NA	NA	NA	NA	NA
Subtotal Stored	9.80E+03[b]	0.00E+00	0.00E+00	0.00E+00	0.00E+00	0.00E+00	6.24E+00[c]
Projected Activity at 2019 (Ci)							
Commercial Sealed Sources (2a)	NA	4.24E+04[d]	3.04E+03[e]	0.00E+00	5.55E+04[f]	0.00E+00	1.39E+01[g]
DOE Sealed Sources (2b)	NA	0.00E+00	0.00E+00	2.21E+01[c]	0.00E+00	3.51E-01[c]	3.07E+01[h]
Commercial ^{137}Cs Sources (2c)	1.77E+06[i]	NA	NA	NA	NA	NA	NA
DOE ^{137}Cs Sources (2d)	2.31E+04[j]	NA	NA	NA	NA	NA	NA
Subtotal Projected	1.80E+06[k]	4.24E+04[d]	3.04E+03[e]	2.21E+01[c]	5.55E+04[f]	3.51E-01[c]	4.46E+02[m]
Total	1.80E+06[l]	4.24E+04[d]	3.04E+03[e]	2.21E+01[c]	5.55E+04[f]	3.51E-01[c]	5.08E+02[n]

[a]From Schelling and Trone (2007b) (Appendix I) and Section 2.1. Decayed radionuclide activities are calculated using Equation 3. In-growth for the period ending in 2019 is not substantial given the nature of the radionuclides. Radionuclide half-life information taken from (KAPL 2002); [b]Contained in 12 sources; [c]Contained in 1 drum; [d]Contained in 1269 drums; [e]Contained in 270 drums; [f]Contained in 1593 drums; [g]Contained in 1 drum; [h]Contained in 1 drum; [i]Contained in 1,435 sources; [j]contained in 34 sources; [k]Contained in 1,469 sources; [l]Contained in 1,481 sources; [m]Contained in 2 drums; [n]Contained in 3 drums.

Table 18. GTCC LLW and DOE GTCC-like Sealed Source Shipments, Shipping Containers, and Disposal Packages[a, b]

Number of Shipping Containers			
Waste Stream	**TRUPACT-II**	**TADs in NAC-STCs**	**CNS8-120B**
Commercial Sealed Sources (2a)	0	0	0
DOE Sealed Sources (2b)	1	1	1
Commercial ^{137}Cs Sources (2c)	0	0	0
DOE ^{137}Cs Sources (2d)	8	5	8
Subtotal Stored	**9**	**6**	**9**
Commercial Sealed Sources (2a)	226	349	786
DOE Sealed Sources (2b)	3	3	3
Commercial ^{137}Cs Sources (2c)	718	240	718
DOE ^{137}Cs Sources (2d)	20	12	20
Subtotal Projected	**967**	**604**	**1527**
Total	**976**	**610**	**1536**
Number of Shipments			
Waste Stream	**TRUPACT-II (on trucks)**	**NAC-STC (on rail cars)**	**CNS8-120B (on rail cars or trucks)**
Commercial Sealed Sources (2a)	0	0	0
DOE Sealed Sources (2b)	1	1	1
Commercial ^{137}Cs Sources (2c)	0	0	0
DOE ^{137}Cs Sources (2d)	5	5	8
Subtotal Stored	**6**	**6**	**9**
Commercial Sealed Sources (2a)	77	349	786
DOE Sealed Sources (2b)	3	3	3
Commercial ^{137}Cs Sources (2c)	240	240	718
DOE ^{137}Cs Sources (2d)	12	12	20
Subtotal Projected	**332**	**604**	**1527**
Total	**338**	**610**	**1536**
Number of Disposal Packages			
Waste Stream	**YM Waste Package**	**7-packs**	**4-packs**
Commercial Sealed Sources (2a)	0	0	NA
DOE Sealed Sources (2b)	1	1	NA
Commercial ^{137}Cs Sources (2c)	0	NA	0
DOE ^{137}Cs Sources (2d)	5	NA	6
Subtotal Stored	**6**	**1**	**6**
Commercial Sealed Sources (2a)	349	450	NA
DOE Sealed Sources (2b)	3	3	NA
Commercial ^{137}Cs Sources (2c)	240	NA	359
DOE ^{137}Cs Sources (2d)	12	NA	13
Subtotal Projected	**604**	**453**	**372**
Total	**610**	**454**	**378**

[a]Calculated in Appendix A; [b]The columns in this table represent individual shipping and/or disposal options. The values in the columns represent the number of shipments that would be required if that particular shipping option was chosen or the number of disposal packages that would be produced if the waste was grouped in that particular disposal package.

Table 19. Waste Stream Container Activities for Sealed Sources[a]

Waste Stream	^{137}Cs	^{238}Pu	^{239}Pu	^{240}Pu	^{241}Am	^{243}Am	^{244}Cm
Average Activity Per Drum or ^{137}Cs Source (Ci/container)							
Commercial Sealed Sources (2a)	NA	0.00E+00	0.00E+00	0.00E+00	0.00E+00	0.00E+00	0.00E+00
DOE Sealed Sources (2b)	NA	0.00E+00	0.00E+00	0.00E+00	0.00E+00	0.00E+00	6.22E+00[c]
Commercial ^{137}Cs Sources (2c)	0.00E+00	NA	NA	NA	NA	NA	NA
DOE ^{137}Cs Sources (2d)	8.16E+02[b]	NA	NA	NA	NA	NA	NA
Average Of Stored	8.16E+02[b]	0.00E+00	0.00E+00	0.00E+00	0.00E+00	0.00E+00	6.22E+00[c]
Commercial Sealed Sources (2a)	NA	3.34E+01[d]	1.13E+01[e]	0.00E+00	3.49E+01[f]	0.00E+00	0.00E+00
DOE Sealed Sources (2b)	NA	0.00E+00	0.00E+00	2.21E+01[c]	0.00E+00	3.51E-01[c]	3.07E+01[c]
Commercial ^{137}Cs Sources (2c)	1.23E+03[j]	NA	NA	NA	NA	NA	NA
DOE ^{137}Cs Sources (2d)	6.79E+02[i]	NA	NA	NA	NA	NA	NA
Average Of Projected	1.22E+03[k]	1.35E+01[g]	9.69E-01[g]	7.04E-02[g]	1.76E+01[g]	1.12E-04[g]	1.42E-01[g]
Average Of Total	1.22E+03[l]	1.35E+01[h]	9.69E-01[h]	7.05E-02[h]	1.77E+01[h]	1.12E-04[h]	1.62E-01[h]
Average Activity Per AMC[m] (Ci/container)							
Commercial Sealed Sources (2a)	NA	0.00E+00	0.00E+00	0.00E+00	0.00E+00	0.00E+00	0.00E+00
DOE Sealed Sources (2b)	NA	0.00E+00	0.00E+00	0.00E+00	0.00E+00	0.00E+00	1.87E+01
Commercial ^{137}Cs Sources (2c)	NA	NA	NA	NA	NA	NA	NA
DOE ^{137}Cs Sources (2d)	NA	NA	NA	NA	NA	NA	NA
Average Of Stored	NA	0.00E+00	0.00E+00	0.00E+00	0.00E+00	0.00E+00	1.87E+01
Commercial Sealed Sources (2a)	NA	1.00E+02	3.39E+01	0.00E+00	1.05E+02	0.00E+00	0.00E+00
DOE Sealed Sources (2b)	NA	0.00E+00	0.00E+00	6.63E+01	0.00E+00	1.05E+00	1.58E+02
Commercial ^{137}Cs Sources (2c)	NA	NA	NA	NA	NA	NA	NA
DOE ^{137}Cs Sources (2d)	NA	NA	NA	NA	NA	NA	NA
Average Of Projected	NA	4.05E+01	2.91E+00	2.12E-02	5.28E+01	3.36E-04	4.26E-01
Average Of Total	NA	4.05E+01	2.91E+00	2.11E-02	5.31E+01	3.36E-04	4.86E-01

[a]Calculated as the values in Table 17 divided by the values from Table 12. Decayed radionuclide activities are calculated using Equation 3. In-growth for the period ending in 2019 is not substantial given the nature of the radionuclides. Radionuclide half-life information taken from (KAPL 2002); [b]Applies to 12 sources; [c]Applies to in 1 drum; [d]Applies to 1269 drums; [e]Applies to 270 drums; [f]Applies to 1593 drums; [g]Applies to 3136 drums; [h]Applies to 3137 drums; [i]Applies to 1435 sources; [j]Applies to 34 sources; [k]Applies to 1469 sources; [l]Applies to 1481 sources; [m]Per drum values multiplied by 3; [n]Per AMC values multiplied by 3; [o]Per source value multiplied by six.

Table 19. Waste Stream Container Activities for Sealed Sources (Continued)

Waste Stream	^{137}Cs	^{238}Pu	^{239}Pu	^{240}Pu	^{241}Am	^{243}Am	^{244}Cm
Average Activity Per Drum or ^{137}Cs Source (Ci/container)							
Average Activity Per TAD[n] (Ci/container)							
Commercial Sealed Sources (2a)	NA	0.00E+00	0.00E+00	0.00E+00	0.00E+00	0.00E+00	0.00E+00
DOE Sealed Sources (2b)	NA	0.00E+00	0.00E+00	0.00E+00	0.00E+00	0.00E+00	5.60E+01
Commercial ^{137}Cs Sources (2c)	0.00E+00	NA	NA	NA	NA	NA	NA
DOE ^{137}Cs Sources (2d)	4.89E+03	NA	NA	NA	NA	NA	NA
Average Of Stored	4.89E+03	0.00E+00	0.00E+00	0.00E+00	0.00E+00	0.00E+00	5.60E+01
Commercial Sealed Sources (2a)	NA	3.01E+02	1.02E+02	0.00E+00	3.14E+02	0.00E+00	0.00E+00
DOE Sealed Sources (2b)	NA	0.00E+00	0.00E+00	1.99E+02	0.00E+00	3.16E+00	4.73E+02
Commercial ^{137}Cs Sources (2c)	7.44E+03	NA	NA	NA	NA	NA	NA
DOE ^{137}Cs Sources (2d)	4.07E+03	NA	NA	NA	NA	NA	NA
Average Of Projected	7.32E+03	1.22E+02	8.72E+00	6.35E-02	1.58E+02	1.01E-03	1.28E+00
Average Of Total	7.32E+03	1.22E+02	8.72E+00	6.34E-02	1.59E+02	1.01E-03	1.46E+00

[a]Calculated as the values in Table 17 divided by the values from Table 12. Decayed radionuclide activities are calculated using Equation 3. In-growth for the period ending in 2019 is not substantial given the nature of the radionuclides. Radionuclide half-life information taken from (KAPL 2002); [b]Applies to 12 sources; [c]Applies to in 1 drum; [d]Applies to 1269 drums; [e]Applies to 270 drums; [f]Applies to 1593 drums; [g]Applies to 3136 drums; [h]Applies to 3137 drums; [i]Applies to 1435 sources; [j]Applies to 34 sources; [k]Applies to 1469 sources; [l]Applies to 1481 sources; [m]Per drum values multiplied by 3; [n]Per AMC values multiplied by 3; [o]Per source value multiplied by six.

4. DOE GTCC-LIKE ACTIVATED METALS

The 2007 inventory update (U. S. DOE 2007a) reported information at a summary level for the expected volumes and activities for DOE-owned activated metals, which do not have an identified path to disposal. While this waste does not fall under the NRC-designated classification for GTCC LLW, it has similar characteristics to GTCC LLW, in particular to the GTCC LLW activated metals generated by nuclear power plants. The DOE-owned activated metal inventory information was obtained for the 2007 inventory update from DOE databases, other documented information sources, and a complex-wide data call performed in August 2005 (Dixon 2006). The inventory information was prepared and sent back to the generator sites for verification. The resulting verified inventory is documented in Dixon (2007). All of the DOE-owned activated metals identified in those sources are listed in Appendix B.

4.1 ESTIMATED VOLUMES

DOE-owned activated metals were identified at INL and ORNL. The total stored volume of unpackaged DOE GTCC-like activated metals is 4.95 m^3 and the projected unpackaged volume is 28.7 m^3 as shown in Table 20.

Table 20. Volumes for DOE GTCC-like Activated Metals[a]

Owner	Description	Location	Unpackaged Stored Volume (m^3)	Unpackaged Projected Volume (m^3)
DOE	Activated Metal (solid)	INL	2.75	28.7
DOE	Activated Metal (solid)	ORNL	2.20	0
	Total		4.95	28.7
Owner	**Description**	**Location**	**Packaged Stored Volume (m^3)**	**Packaged Projected Volume (m^3)**
DOE	Activated Metal (solid)	INL	3.67	38.3
DOE	Activated Metal (solid)	ORNL	2.93	0
	Total		6.60	38.3

[a]Values from Appendix B, Table B.1. The sites provided unpackaged volumes and packaged volumes were calculated as described in Appendix B.

4.2 CHEMICAL AND PHYSICAL FORMS

The DOE GTCC-like activated metal is steel or stainless steel that is relatively both chemically and physically inert. The stored waste volumes contain beryllium.

4.3 ESTIMATED ACTIVITIES

The total stored and projected activities of DOE GTCC-like activated metals are shown in Table 21. Calculation of the activities is documented in Appendix B. For the stored volume, reported activities were assumed to be as of 2019. Activities for the projected volume are for the date on which they become available for shipment.

INL provided detailed radionuclide breakdown information for a large number of nuclides, which was used to calculate the radionuclide activities for activated metal from INL shown in Appendix B. Projections of future waste generation were provided in five year increments from 2006 to 2035, with an additional projection for the volume generated after 2035.

ORNL reported a radionuclide breakdown for nine nuclides for one waste component, including ^{14}C, ^{58}Co, ^{60}Co, ^{55}Fe, ^{3}H, ^{129}I, ^{192}Ir, ^{204}Tl, and ^{65}Zn. For a second waste component, ORNL reported a radionuclide breakdown for seven nuclides, including ^{60}Co, ^{152}Eu, ^{154}Eu, ^{155}Eu, ^{55}Fe, ^{3}H, and ^{63}Ni. This information was used to calculate the radionuclide activities for activated metal from ORNL shown in Appendix B. ^{60}Co and ^{55}Fe dominate the inventory and the dose initially, but with 5.27 year and 2.7 year half-lives respectively, they diminish rapidly and are not considered to be large contributors to dose at later times. Several other radionuclides have much longer half-lives and are present in sufficient concentration to provide long-term dose considerations. For these reasons, the more significant radionuclides for this analysis are ^{14}C, ^{54}Mn, ^{55}Fe, ^{59}Ni, ^{60}Co, ^{63}Ni, ^{93}Mo, and ^{94}Nb.

Table 21. Radionuclide Activities for DOE GTCC-like Activated Metals[a]

Isotope	Stored Activity (Ci)	Projected Activity (Ci)	Stored Activity (Ci)	Projected Activity (Ci)
	INL		ORNL	
^{14}C	5.47E+01	4.87E+02	1.41E+02	0
^{54}Mn	0	0	5.43E-06	0
^{55}Fe	0	0	1.06E+02	0
^{59}Ni	6.03E-01	2.50E+00	0	0
^{60}Co	1.18E+02	6.37E+05	5.39E+02	0
^{63}Ni	1.10E+02	6.05E+02	7.92E+01	0
^{93}Mo	0	0	0	0
^{94}Nb	1.77E-03	3.68E+01	0	0

[a]Values from Appendix B, Table B.2.

4.4 PACKAGES

Table 22 shows potential waste, shipping, and disposal packages for DOE GTCC-like activated metals.

4.4.1 Waste Packages and Locations

Because of uncertainty and variations in packaging as reported, it is assumed that for the DOE GTCC-like activated metals, like the GTCC LLW from nuclear reactors, canisters are used for all of the waste. The canisters were described in Section 2.4.1 and are either AMCs, SAMCs, h-SAMCs or RH canisters. Calculating the number of canisters needed to accommodate the DOE activated metal waste yields a total of 51 AMCs, or 154 SAMCs, or 234 h-SAMCs or 54 RH canisters of DOE activated metal waste that would require disposal (Appendix B, Table B.3).

Table 22. Package Descriptions for DOE GTCC-like Activated Metals

	Type	Materials	External Dimensions	Internal Dimensions	Internal Accommodations	Container Weight (lb)
Waste Packages						
All DOE GTCC-like activated metal	Canister[a]	ASTM A-516 grade 55, 60, or 70 grade carbon steel or A-276 or A-240 Type 304 or 304L stainless steel	110" long 28" od	108" long 26" id	0.94 m^3 of metal waste	3,020 (empty) 15,480 (full)
All DOE GTCC-like activated metal	Shielded Canister[a]	ASTM A-516 grade 55, 60, or 70 grade carbon steel or A-276 or A-240 Type 304 or 304L stainless steel	110" long 28" od	97.5" long 15.5" id	0.301 m^3 of metal waste	18,978 (empty) 22,940 (full)
All DOE GTCC-like activated metal	Half Shielded Canister[a]	ASTM A-516 grade 55, 60, or 70 grade carbon steel or A-276 or A-240 Type 304 or 304L stainless steel	55" long 28" od	45.4" long 18.4" id	0.197 m^3 of metal waste	8,280 (empty) 9,220 (full)
All DOE GTCC-like activated metal	RH Canister[b]	ASTM A-516 grade 55, 60, or 70 grade carbon steel or A-276 or A-240 Type 304 or 304L stainless steel	121" long 26" od	110" long 25" id	0.89 m^3 of metal waste	1,760 (empty) 6,308 (full)
Shipping Container[c]						
WIPP	CNS 3-55[d]	Certificate 5805	133.75" high 50.5" od	111" high 36" id	1 half-shielded canister	70,000 (MGW) 9,220 (MCW)
WIPP	RH 72B Cask [d]	Certificate 9212	141.75" long 41.63" od	130" long 32" id	1 RH Canister	45,000 (MGW) 8,000 (MCW)

[a]All dimensions, materials and weights for this canister are assumed based on dimensions, materials and weights of canisters used for similar purposes. Internal volumes and container weights calculated in Hillesheim and Schermerhorn (2007b)(Appendix D); [b] http://www.wipp.energy.gov/library/rhwaste/rhapp-a.htm. The weight of the loaded RH canister was calculated in Trone and Hendren (2007) (Appendix J); [c]Shipping containers listed in this table are mentioned because a shipping container like the one described could be used for transportation of the material from the generator to the disposal site. The shipping containers listed here are meant to be representative not necessarily prescriptive. A current certification for any one of the shipping containers would have to be maintained or obtained before shipping GTCC LLW; [d](RAMPAC 2006). This transportation cask can accommodate one canister.

Table 22. Package Descriptions for DOE GTCC-like Activated Metals (continued)

Shipping Container						
YM Rep. - Rail	NAC-STC[e]	Certificate 9235	193" long 99"od	165" long 71"id	1 TAD loaded with 3 canisters	260,000 (MGW) unknown (MCW)
Land disposal sites – Rail	NAC-STC[e]	Certificate 9235	193" long 99"od	165" long 71"id	3 canisters or 3 shielded canisters	260,000 (MGW) Unknown (MCW)
Land disposal sites –Truck	CNS 3-55[d]	Certificate 5805	133.75" high 50.5" od	111" high 36" id	1 half-shielded canister	70,000 (MGW) 9,220 (MCW)
Disposal Package						
WIPP	3-pack[f]	Stainless steel	55" high 56" ed	NA	3 half-shielded canisters	27,720 (full)
WIPP	RH Canister[g]	Stainless Steel	121" long 26" ed	NA	0.89 m^3 of waste	6,308 (full)
YM Repository	YM Package[h]	Not Specified	212" long 66" od	NA	1 TAD loaded with 3 canisters	Not specified
Land disposal sites	3-pack[d]	Stainless steel	110" high 56" ed	NA	3 canisters	46,560 (full)
Land disposal sites	3-pack	Stainless steel	110" high 56" ed	NA	3 shielded canisters	68,694 (full)
Land disposal sites	7-pack	Stainless steel	55" high 82" ed	NA	7 half-shielded canisters	64,680 (full)

[e](RAMPAC 2006). Canisters will be loaded into TADs (U. S. DOE 2007b) and one TAD will be loaded into a NAC-STC or similar transportation cask. The TAD can accommodate 3 canisters; [f]Containers of this size are disposed as 3-packs in WIPP (Moody 2007) "ed" is the emplacement diameter; [g]The RH canisters would be placed individually in WIPP (http://wipp.energy.gov/library/rhwaste/rhapp-a.htm); [h]Disposal at the YM repository will involve placement of TADs in a "waste package" which serves as the disposal package for the YM repository. One TAD would be packaged in the disposal package for disposal at the YM repository.

4.4.2 Shipping Containers

Shipping AMCS, SAMCs, h-SAMCs, and RH canisters was described in Section 2.4.2. If these canisters are used for the DOE activated metals, the same shipping considerations would apply.

An estimate of the number of shipments to WIPP for the DOE activated metal is 234 shipments if the h-SAMCs are used or 54 if the RH canisters are used (Appendix B, Table B.4).

An estimate of the number of rail shipments to the proposed YM repository for the DOE activated metals is 20 shipments, 20 TADs and 20 rail casks (Appendix B, Table B.4).

An estimate of the number of shipments to the land disposal sites for the DOE activated metals is 20 shipments by rail if the AMC is used, 54 shipments by rail if the SAMC is used or 234 shipments by truck if the h-SAMC is used (Appendix B, Table B.4).

4.4.3 Disposal Packages

Disposal of AMCS, SAMCs, h-SAMCs, and RH canisters was described in Section 2.4.3. If these canisters are used for the DOE activated metals, the same disposal considerations would apply. Disposal in WIPP would involve either 3-packs placed in a WIPP room or RH canisters placed in the walls of WIPP. Disposal in the proposed YM repository would involve placement of the TADs container into the YM "waste package" and emplacement of the "waste package" in a drift. Disposal at the land disposal sites would involve emplacement of three-packs of AMCs, emplacement of three-packs of SAMCs, and emplacement of seven-packs of h-SAMCs. Emplacement of three-packs of AMCs requires remote handling. Emplacement of three-packs of SAMCs and h-SAMCs do not require remote handling.

4.5 WASTE STREAMS

The DOE-owned activated metals were formulated into a single waste stream with homogenous properties located at INL and ORNL for further analysis as shown in Table 23.

Table 23. DOE GTCC-like Activated Metal Waste Streams

Waste Stream	Description	Radionuclides	Generator Sites	Origin	Chemical Form	Physical Form
3	Activated Metal	^{14}C, ^{54}Mn, ^{55}Fe, ^{59}Ni, ^{63}Ni, ^{60}Co, ^{94}Nb, ^{93}Mo, and others	INL and ORNL	Neutron activation of stainless steel	Stainless Steel	Solid metal

4.5.1 Generation Rates

Roughly fifteen percent of the volume of DOE GTCC-like activated metals was reported as stored waste. The remaining approximately 85 percent is expected to be generated between 2006 and 2035.

4.5.2 Numbers of Containers

The stored and projected waste stream volumes and number of containers for the DOE activated metal waste stream identified in Section 4.5 are shown in Table 24. These are summary values from the information given in Appendix B.

Table 24. DOE GTCC-like Activated Metal Waste Stream Volume and Number of Containers[a, b]

Category	Volume (m^3)	Number of AMCs	Number of SAMCs	Number of h-SAMCs	Number of RH Canisters
Stored	4.95E+00	9	25	36	9
Projected	2.87E+01	42	129	198	45
Total	3.37E+01	51	154	234	54

[a]Tabulated using data from Appendix B; [b]The last four columns in this table represent four different packaging options. The values given represent the number of packages that would be produced if the waste were packaged in that particular waste package.

4.5.3 Container Activities

Average waste stream container activities for the DOE activated metal at the time waste becomes available for disposal are given in Table 25. Activities per container are listed for ^{14}C, ^{54}Mn, ^{55}Fe, ^{59}Ni, ^{60}Co, ^{63}Ni, ^{93}Mo, and ^{94}Nb.

Table 25. DOE GTCC-like Activated Metal Waste Stream Activities[a, b]

Category	^{14}C	^{54}Mn	^{55}Fe	^{59}Ni	^{60}Co	^{63}Ni	^{93}Mo	^{94}Nb
Average Activity Per AMC (Ci/container)								
Stored	2.18E+01	6.03E-07	1.17E+01	6.70E-02	7.30E+01	2.10E+01	0.00E+00	1.96E-04
Projected	1.16E+01	0.00E+00	0.00E+00	5.96E-02	1.52E+04	1.44E+01	0.00E+00	8.77E-01
Total	1.34E+01	1.06E-07	2.07E+00	6.09E-02	1.25E+04	1.56E+01	0.00E+00	7.22E-01
Average Activity Per SAMC (Ci/container)								
Stored	7.84E+00	2.17E-07	4.22E+00	2.41E-02	2.63E+01	7.57E+00	0.00E+00	7.07E-05
Projected	3.78E+00	0.00E+00	0.00E+00	1.94E-02	4.94E+03	4.69E+00	0.00E+00	2.85E-01
Total	4.44E+00	3.52E-08	6.85E-01	2.02E-02	4.14E+03	5.16E+00	0.00E+00	2.39E-01
Average Activity Per h-SAMC (Ci/container)								
Stored	5.44E+00	1.51E-07	2.93E+00	1.68E-02	1.82E+01	5.26E+00	0.00E+00	4.91E-05
Projected	2.46E+00	0.00E+00	0.00E+00	1.26E-02	3.22E+03	3.05E+00	0.00E+00	1.86E-01
Total	2.92E+00	2.32E-08	4.51E-01	1.33E-02	2.73E+03	3.39E+00	0.00E+00	1.57E-01
Average Container Activity RH Canisters								
Stored	2.18E+01	6.03E-07	1.17E+01	6.70E-02	7.30E+01	2.10E+01	0.00E+00	1.96E-04
Projected	1.08E+01	0.00E+00	0.00E+00	5.56E-02	1.42E+04	1.34E+01	0.00E+00	8.18E-01
Total	1.26E+01	1.01E-07	1.95E+00	5.75E-02	1.18E+04	1.47E+01	0.00E+00	6.82E-01

[a]Tabulated using data from Appendix B; [b]Values in this table are averages calculated by dividing the total activity in that waste group by the number of containers.

4.5.4 Shipments, Shipping Containers, and Disposal Packages

The number of shipments, shipping containers, and disposal packages for the DOE activated metals are shown in Table 26. These are summary values from the information given in Appendix B.

Table 26. Nuclear Utility GTCC LLW Waste Stream Shipments, Shipping Containers, and Disposal Packages[a, d]

Category	Number of Rail Shipments[b]		Number of Truck Shipments[c]		Disposal Package
	AMCs	SAMCs	h-SAMCs	RH Canisters	RH Canisters
Stored	5	9	36	9	9
Projected	15	45	198	45	45
Total	20	54	234	54	54
Disposal Packages					
	3-packs of AMCs	3-packs of SAMCs	3-packs of h-SAMCs	7-packs of h-SAMCs	TADs/YM Disposal Packages
Stored	5	9	13	7	5
Projected	15	45	67	30	15
Total	20	54	80	37	20

[a]From Appendix B; [b]One NAC-STC per railcar. Therefore, the number of shipping containers equals the number of shipments; [c]One CNS 3-55 or RH 72B cask per truck. Therefore, the number of shipping containers equals the number of shipments; [d]The columns in this table represent individual shipping and/or disposal option. The values in the columns represent the number of shipments that would be required if that particular shipping option was chosen or the number of disposal packages that would be produced if the waste was grouped in that particular disposal package.

5. GTCC LLW AND DOE GTCC-LIKE OTHER WASTES

The remaining inventory of GTCC LLW consists of other waste, contaminated debris, and other wastes generated by radionuclide manufacturing, commercial research, and similar types of operations. The DOE also has GTCC-like waste other than activated metal and sealed sources, which does not have an identified path to disposal. While this waste is not subject to NRC regulation if disposed of at DOE facilities, it has characteristics similar to GTCC LLW. The commercial and DOE wastes other than activated metal and sealed sources are considered together here under the category of other waste. An analysis of the commercial other waste and DOE-owned other waste is given in Trone (2008) (Appendix F). Summary information from that analysis is given here.

5.1 ESTIMATED VOLUMES

Two commercial generators of GTCC LLW falling into the other waste category were identified for the DOE 2007 update (U. S. DOE 2007a), and are located in Virginia and Texas. The total stored volume reported is 76 m^3. The total projected volume reported is less than 1 m^3. DOE-owned other wastes were identified at BWXT-Lynchburg Virginia (DOE waste at a commercial facility) [BWXT], ORNL, Oak Ridge (waste managed by Bechtel Jacobs Company LLC), INL, the proposed Radioisotope Power Systems [RPS] consolidation project, and the West Valley Demonstration Project (WVDP). The DOE-owned other waste information was obtained for the 2007 inventory update from DOE databases, other documented information sources, and a complex-wide data call performed in August 2005 (Dixon 2006), with updates from WVDP (Bohan 2008) in April 2008. The inventory information was prepared and sent back to the generator sites for verification. The resulting verified inventory is documented in Dixon (2007) and (Bohan 2008). The total volume of CH and RH waste, both stored and projected is given in Table 27 (Trone 2008) (Appendix F).

Table 27. Total Volume of CH and RH Other Waste Included in the GTCC LLW EIS Analysis

Category	CH Other Waste Packaged[a] Volume (m^3)	RH Other Waste Packaged Volume (m^3)
Stored	535.12	643.49[b]
Projected	1412.26	1206.09
Total	1947.38	1849.58

[a]Most of the sites reported packaged volumes for their waste except as noted; [b]Includes waste from ORNL that was reported as 100 m^3 unpackaged. A packaging factor of 1.33 as described in Trone (2008) (Appendix F) was applied.

5.2 CHEMICAL AND PHYSICAL FORMS

Chemical and physical forms for the other waste are highly varied. They include but are not limited to: sludges, salts, charcoal, scrap metal, organic and inorganic debris (Dixon 2007).

5.3 ESTIMATED ACTIVITIES

The stored and projected activities of GTCC LLW and DOE GTCC-like other waste were calculated as described in Trone (2008) (Appendix F) and are shown in Table 28.

Table 28. Radionuclide Activities for GTCC LLW and DOE GTCC-like Other Waste[a]

Waste	Activity at the Time Waste is Available for Disposal (Ci)								
	^{14}C	^{54}Mn	^{55}Fe	^{59}Ni	^{60}Co	^{63}Ni	^{90}Sr	^{93}Mo	^{94}Nb
Stored CH	5.60E+03	1.06E-04	2.57E+02	2.90E-04	5.07E+00	3.61E-02	4.17E+03	0	3.31E-04
Stored RH	6.00E+03	5.67E-04	2.43E+02	9.75E+03	1.29E+04	5.69E+05	3.09E+05	0	6.01E+00
Projected CH	4.44E+03	7.09E+00	7.10E+03	2.34E+02	8.32E+01	6.79E+02	4.89E+03	0	2.27E+02
Projected RH	2.76E+03	4.41E+00	2.70E+02	2.19E+01	1.98E+02	1.92E+03	7.39E+04	7.77E-03	2.32E-02
Total	1.88E+04	6.85E+01	2.49E+04	1.00E+04	8.16E+04	6.29E+05	5.18E+05	7.77E-03	2.33E+02
	^{99}Tc	^{137}Cs	^{210}Pb	^{229}Th	^{230}Th	^{233}U	^{235}U	^{237}Np	^{238}Pu
Stored CH	3.31E-04	2.11E+02	2.37E+03	3.18E-04	9.34E+02	1.68E+02	6.46E+03	2.10E+01	4.86E+05
Stored RH	6.01E+00	9.75E+03	2.67E+05	4.64E-09	4.52E+00	1.65E+00	9.75E+02	7.87E+01	1.16E+04
Projected CH	2.27E+02	1.73E+02	2.77E+03	6.72E-06	7.39E+02	1.33E+02	5.10E+03	1.63E+01	4.28E+05
Projected RH	2.32E-02	1.13E+02	3.92E+05	1.51E-10	4.60E+02	8.28E+01	3.17E+03	1.65E+01	2.70E+05
Total	2.33E+02	1.03E+04	7.66E+05	4.98E-04	2.14E+03	3.86E+02	1.57E+04	1.32E+02	1.20E+06
	^{239}Pu	^{240}Pu	^{241}Pu	^{241}Am	242Pu	^{243}Am	^{244}Cm		
Stored CH	3.74E+05	2.99E+05	4.48E+06	1.32E+06	1.87E+03	1.44E+04	5.81E+02		
Stored RH	9.42E+04	7.11E+04	2.24E+05	8.44E+04	2.36E+02	5.26E+03	1.23E+03		
Projected CH	2.96E+05	2.36E+05	6.94E+06	1.06E+06	1.48E+03	1.14E+04	7.84E+02		
Projected RH	1.84E+05	1.47E+05	4.32E+06	6.63E+05	9.20E+02	7.08E+03	5.86E+02		
Total	9.48E+05	7.54E+05	1.60E+07	3.13E+06	4.50E+03	3.81E+04	3.18E+03		

[a]From Trone (2008) (Appendix F).

Reported values for stored waste were decayed from 2007 to 2109 to obtain the values in Table 28 because stored waste is assumed to become available for disposal in 2019. The radionuclides that are being tracked in this analysis were chosen because they would be the important contributors to dose over long time frames (Ragan 2002; Leigh et al. 2005a).

5.4 PACKAGES

Table 29 shows potential waste, shipping, and disposal packages for GTCC LLW and DOE GTCC-like other waste.

5.4.1 Waste Packages and Locations

It is assumed for this analysis that all GTCC LLW and DOE GTCC-like other waste is packaged in 55-gallon drums, with the exception of WVDP stored CH-TRU waste streams, which will be packaged in standard waste boxes (SWBs). RH-TRU drums are placed in RH canisters (U. S. DOE 2006b). The RH canister can accommodate three 55-gallon drums. This is consistent with the precedent that has been set for RH-TRU waste going to WIPP. For the most part, RH-TRU waste is placed in 55-gallon drums and then loaded into RH canisters (Leigh et al. 2005b).

Fifty-five gallon drums of CH waste going to the YM repository would have to be over-packed in a canister that is acceptable for disposal in the YM repository. It is assumed that the canister described in Section 2.4.1 is suitable for this purpose. All dimensions, materials and weights for

that canister are assumed based on dimensions, materials and weights of canisters used for similar purposes. Three 55-gallon drums can fit in a vessel with those inner dimensions. Therefore, it is assumed that if the CH waste is going to the YM repository, it will be loaded into AMCs prior to shipment and disposal.

The GTCC LLW and DOE GTCC-like other waste inventory is dominated by the projected RPS waste Trone (2008) (Appendix F), the generating location of which has not yet been determined.

5.4.2 Shipping Containers

All shipping containers used for shipping GTCC LLW and DOE GTCC-like waste must meet the standards for Type B shipping containers. For environmental impact assessment purposes, all Type B containers can be modeled as having the same impacts for both routine, incident-free transportation and transportation accidents (Sprung et al. 2001; U. S. DOE 2002). Therefore, the exact Type B shipping container is not being recommended here; instead a representative Type B shipping container that could be used for transportation is being described. In addition, any shipping container listed in this section is mentioned because a shipping container like the one described could be used for transportation of the material from the generator to the disposal site. The shipping containers listed here are meant to be representative not necessarily prescriptive. A current certification for any one of the shipping containers would have to be maintained or obtained before shipping GTCC LLW.

Type B shipping containers are large, heavy, and expensive, and will only be used for transportation in this analysis, not for disposal. This is a precedent that has already been set for WIPP and is being recommended for the YM repository. In this analysis, it is assumed that at all sites, including the WIPP and the proposed YM repository, the waste packages (55-gallon drums or SWB containing other waste or canisters containing 55-gallon drums) will be transferred from the shipping container to either a disposal package or directly into the disposal facility without further packaging.

For WIPP, which does not currently use a rail option, shipment by truck would be necessary. The TRUPACT-II (U. S. DOE 2005b) can be used for the CH waste. Two 7-packs of 55-gallon drums or two SWBs can be transported in a TRUPACT-II, and up to three TRUPACT-IIs can be loaded on a truck for shipment to WIPP. The RH-72B cask (U. S. DOE 2005b) can be used for the RH waste. One RH canister can be transported in a RH-72B cask and one RH-72B cask can be loaded on a truck for shipment to WIPP. An estimate of the number of truck shipments to WIPP for the other waste is 3194 shipments, 219 CH and 2975 RH Trone (2008) (Appendix F).

For shipment to the proposed YM repository, a canister (containing 3 55-gallon drums), two SWBs or a RH canister would be loaded into a TAD which would then be loaded into the rail cask. While a final design for the TAD has not been selected, the preliminary designs submitted by Energy Solutions (Energy Solutions 2007), Transnuclear, Inc. (TN 2007), and NAC International, Inc. (NAC 2007) are similar with an outside diameter for the TAD of 66 inches and a maximum length of 212 inches. Based on the expected TAD dimensions, three canisters, two SWBs or three RH canisters could fit in a TAD. In addition, TADs procurement information indicates that a transportation cask will be provided for the TADs that will allow one TAD per cask per railcar for shipment to the YM repository (NAC 2007). An estimate of the number of

rail shipments to the proposed YM repository for the other waste is 1930 shipments (Trone 2008) (Appendix F). The estimates in Trone (2008) are considered upper bounds for the number of TADs.

For shipment to all of the land disposal sites either by rail or by truck, the CNS8-120B (RAMPAC 2006) can be used for CH waste. This container will house four 55-gallon drums. An estimate of the number of CH shipments to the land disposal sites for the other waste using the CNS8-120B is 2,059 shipments by rail or truck (Trone 2008).

For the RH other waste, truck shipments using the RH-72B would result in 2975 shipments. The rail option for RH other waste to the land disposal sites would involve the NAC-STC. Three RH canisters would fit in the NAC-STC and would result in 993 rail shipments of RH other waste to the land disposal sites (Trone 2008) (Appendix F).

Table 29. Package Descriptions for GTCC LLW and DOE GTCC-like Other Wastes

	Type	Materials	External Dimensions	Internal Dimensions	Internal Accommodations	Weight (lb)
Waste Package						
CH Waste	55-gallon drum[a]	Carbon steel	35” long 24” od	33.25” long 22.5” id	0.208 m^3 of waste	65 (empty) <1,000 (full) 515 (maximum full weight
	Standard Waste Box (SWB)[b]	Steel	36.88” height 71” length 54.5” width	36.56” height 68.75” length 52” width	1.88 m^3 of waste	640 (empty) 4000 (maximum full weight)
CH Waste going to the YM Repository	Canister[c]	ASTM A-516 grade 55, 60, or 70 grade carbon steel or A-276 or A-240 Type 304 or 304L stainless steel	110 ” long 28” od	108 ” long 26” id	3 55-gallon drums	3,020 (empty) 6,020 (full)
	Standard Waste Box (SWB)[b]	Steel	36.88” height 71” length 54.5” width	36.56” height 68.75” length 52” width	1.88 m^3 of waste	640 (empty) 4000 (maximum full weight)
RH Waste	RH Canister[d]	ASTM A-516 grade 55, 60, or 70 grade carbon steel or A-276 or A-240 Type 304 or 304L stainless steel	121” long 26” od	110” long 25” id	0.89 m^3 of waste; 3 55-gallon drums	1,760 (empty) <8,000 (full) 3,307 (max for WIPP)

[a]Based on the CH TRAMPAC, Revision 2, Section 2.1.1. (U. S. DOE 2006a), the gross weight for a 55-gallon drum is 1,000 pounds. Section 2.9.1 of the TRAMPAC lists the inside dimensions for the 55-gallon drum at 33 ¼” (H) X 22 ½” (W). The outside dimensions are 35” (H) X 24” (W). Hillesheim and Hendren (2007a) (Appendix C) calculate an empty drum weight of 65 lbs and a drum full of concrete with a weight of 1163.14 lbs. The density of the other waste is unknown and it is not possible to calculate the weight of a full drum of other waste. However, the maximum allowable full weight for WIPP given the assumption of 14 drums for TRUPACT-II is 515 lbs. For drums going to the land disposal sites voids are not allowed and the full weight is closer to the weight of a drum full on concrete; [b]Based on the CH TRAMPAC , Revision 2, Section 2.9.8. (U. S. DOE 2006a) [c]55-gallon drums going to the YM repository would have to be over-packed in a canister that is acceptable for disposal in the YM repository. It is assumed that the canister described in Section 2.4.1 is suitable for this purpose. All dimensions, materials and weights for that canister are assumed based on dimensions, materials and weights of canisters used for similar purposes. Three 55-gallon drums can fit in a vessel with these inner dimensions. Hillesheim and Schermerhorn (2007b) (Appendix D) calculated the empty weight of 3,020 lbs; the full weight of the AMC would be 6,020 lbs; [d]http://www.wipp.energy.gov/library/rhwaste/rhapp-a.htm.

Table 29. Package Descriptions for GTCC LLW and DOE GTCC-like Other Waste (continued)

		Type	Materials	External Dimensions	Internal Dimensions	Internal Accommodations	Weight (lb)
Shipping Container[e]							
WIPP	CH waste	TRUPACT-II[d]	Certificate 9218	122" high 94" od	75" high 73" id	14 55-gallon drums 2 SWBs	19,250 (MGW) 7,265 (MCW)
	RH waste	RH 72B Cask[f]	Certificate 9212	141.75" long 41.63" od	130" long 32" id	1 RH canister	45,000 (MGW) 8,000 (MCW)
YM Rep. - Rail	CH waste	NAC-STC[g]	Certificate 9235	193" long 99"od	165" long 71"id	1 TAD loaded with 3 canisters or 2 SWBs	260,000 (MGW) Unknown(MCW)
	RH waste	NAC-STC[g]	Certificate 9235	193" long 99"od	165" long 71"id	3 RH canisters	260,000(MGW) Unknown(MCW)
All other sites – Rail	CH Waste	CNS8-120B[h]	Certificate 9168	88" long 74" od	75" long 62" id	4 55-gallon drums 1 SWB	74,000(MGW) 14,680(MCW)
	RH Waste	NAC-STC[g]	Certificate 9235	193" long 99"od	165" long 71"id	3 RH canisters	260,000 (MGW) Unknown(MCW)
All other sites –Truck	CH Waste	CNS8-120B[h]	Certificate 9168	88" long 74" od	75" long 62" id	4 55-gallon drums 1 SWB	74,000 (MGW) 14,680 (MCW)
	RH Waste	RH 72B Cask[i]	Certificate 9212	141.75" long 41.63" od	130" long 32" id	1 RH canister	45,000 (MGW) 8,000(MCW)

[d]The TRUPACT-II SAR, Revision 21, May 2005 (U. S. DOE 2005b) gives information about the TRUPACT-II. It holds 14 55-gallon drums; [e]Shipping containers listed in this table are mentioned because a shipping container like the one described could be used for transportation of the material from the generator to the disposal site. The shipping containers listed here are meant to be representative not necessarily prescriptive. A current certification for any one of the shipping containers would have to be maintained or obtained before shipping GTCC LLW; [f]*RH TRU 72B Cask SAR,* Table 1.2-1 (U. S. DOE 2006b); [g](RAMPAC 2006). The NAC-STC can transport three canisters at a time; [h](RAMPAC 2006). For sites other than the YM repository, it is assumed that 55-gallon drums are transported without overpacking. For this reason, a smaller rail cask was chosen. This rail cask can transport four 55-gallon drums or one SWB at a time; [i]*RH TRU 72B Cask SAR,* Table 1.2-1 (U. S. DOE 2006b).

Table 29. Package Descriptions for GTCC LLW and DOE GTCC-like Other Wastes (continued)

		Type	Materials	External Dimensions	Internal Dimensions	Internal Accommodations	Empty Weight (lb)
Disposal Package							
WIPP	CH Waste	7-pack[j]	Carbon steel and shrink wrap	35" high 72" ed	NA	7 55-gallon drums	3,605 (maximum)
		SWB[k]	Steel	36.88" height 71" length 54.5" width	NA	4 55-gallon drums or direct load	640
	RH Waste	RH Canister[l]	ASTM A-516 grade 55, 60, or 70 grade carbon steel or A-276 or A-240 Type 304 or 304L stainless steel	121" long 26" od	NA	1 RH canister	3,307 (maximum)
YM Repository	CH Waste	YM Waste Disposal Package[m]	Not specified	212" long 66" od	NA	1 TAD loaded with 3 canisters or 2 SWBs	Not specified
	RH Waste	YM Waste Disposal Package[m]	Not specified	212" long 66" od	NA	1 TAD loaded with 3 canisters	Not specified
All other sites	CH waste	7-pack[n]	Stainless steel	35" high 72" ed	NA	7 55-gallon drums per	NA (empty) 7,000 (full)
		SWB[k]	Steel	36.88" height 71" length 54.5" width	NA	4 55-gallon drums or direct load	640
	RH waste	3-pack[o]	Stainless steel	121" high 55" ed	NA	3 RH canisters	18,588

[j]Drums are placed in WIPP in 7-packs. The emplacement diameter, "ed", of a 7-pack is 72" CH TRAMPAC, Revision 2 (U. S. DOE 2006a); [k] CH TRAMPAC, Revision 2 (U. S. DOE 2006a) [l] The RH canisters would be placed individually in WIPP (http://www.wipp.energy.gov/library/rhwaste/rhapp-a.htm); [m]Disposal packages for use in the proposed YM repository are being designed, and the final designs have not been chosen (Energy Solutions 2007; NAC 2007; TN 2007). For the purposes of this analysis, it is assumed that the disposal package is basically the size of a TAD; [n]Following the example set by WIPP, it is assumed that 55-gallon drums at the land disposal sites would be emplaced in groups of 7; [o]Because of weight and handling considerations, canisters will be emplaced as 3-packs. "ed" is the emplacement diameter of the 3-pack.

5.4.3 Disposal Packages

CH-TRU GTCC LLW and DOE GTCC-like other waste will be disposed of in WIPP in either 55-gallon drums or SWBs. Disposal of CH 55-gallon drums in WIPP involves bundling the drums in seven-packs. Seven-packs are stacked in a WIPP disposal room three in a stack. SWBs are disposed of in WIPP in stacks of three high. Disposal of RH canisters in WIPP would involve emplacing the canisters horizontally in the walls of WIPP rooms.

For disposal at the proposed YM repository, the waste would arrive at the site packaged in TADs, each containing 2 SWBS, or three canisters, either AMCs or RH canisters. The TADs would be unloaded from the rail casks and placed in a disposal package[8] before emplacement in the repository. Currently, disposal packages for use in the proposed YM repository are being designed, and the final designs have not been chosen (Energy Solutions 2007; NAC 2007; TN 2007). For the purposes of this analysis, it is assumed that the disposal package is basically the size of a TAD and is available for disposal of GTCC LLW and DOE GTCC-like other waste.

At the land disposal sites, CH-TRU waste will be disposed of in 55-gallon drums or SWBs. Disposal of CH 55-gallon drums could involve bundling the drums in seven-packs. Other packaging configurations are possible. For example, three-packs and four-packs could be used. However, there may be operational advantages to using the seven-pack with the conceptual designs being developed by the project for the land disposal site. Disposal of RH canisters would involve emplacing the canisters in three-packs.

5.5 WASTE STREAMS

The GTCC LLW and DOE GTCC-like other wastes were formulated into one waste stream with homogenous properties for further analysis as shown in Table 30.

5.5.1 Generation Rates

Roughly one third of the GTCC LLW and DOE GTCC-like other waste was reported as stored waste. The remainder is expected to be generated between 2006 and 2035.

5.5.2 Waste Stream Volumes and Numbers of Containers

Table 31 shows the volumes and numbers of containers for the GTCC LLW and DOE GTCC-like other waste streams (Trone 2008) (Appendix F).

[8] What is called the disposal package in this document is referred to as the waste package in YM documents.

Table 30. GTCC LLW and DOE GTCC-like Other Waste Streams[a]

Waste Stream	Description	Generator Sites
4a	Contact-handled commercial other waste, contaminated debris, and other wastes	Two NRC licensees (one in Texas and one in Virginia)
4b	Contact-handled DOE other waste, contaminated debris, and other wastes	BWXT, ORNL, INL, WVDP
4c	Remote-handled commercial other waste, contaminated debris, and other wastes	One NRC licensee (located in Virginia)
4d	Remote-handled DOE other waste, contaminated debris, and other wastes	BWXT, INL, RPS, WVDP

[a]Radionuclides are listed in Table 25.

Table 31. GTCC LLW and DOE GTCC-like Other Waste Volumes and Containers[a, b]

Category	Volume (m3)	Number of 55-gallon drums	Number of SWBs	Number of RH Canisters	Number of AMCs	Number of TADs
Stored						
Commercial CH Other Waste (4a)	43.00	208	NA	NA	71	25
DOE CH Other Waste (4b) [c]	492.12	306	229	NA	103	151
Commercial RH Other Waste (4c)	33.00	159	NA	53	NA	18
DOE RH Other Waste (4d)	610.49	2941	NA	985	NA	332
Subtotal Stored	**1178.61**	**3614**	**229**	**1038**	**174**	**526**
Projected						
Commercial CH Other Waste (4a)	0	0	NA	NA	0	0
DOE CH Other Waste (4b)	1412.26	6791	NA	NA	2265	756
Commercial RH Other Waste (4c)	1.00	5	NA	2	NA	1
DOE RH Other Waste (4d)	1205.09	5797	NA	1935	NA	647
Subtotal Projected	**2618.35**	**12593**	**NA**	**1937**	**2265**	**1404**
Total	**3796.96**	**16207**	**229**	**2975**	**2439**	**1930**

[a]From Trone (2008) (Appendix F); [b]The last five columns in this table represent five different packaging options. The values given represent the number of packages that would be produced if the waste were packaged in that particular waste package. [c]The values given for this waste stream includes WVDP stored CH-TRU waste streams that will be packaged into SWB for disposal. The total waste stream consists of 306 55-gallon drums from other sites and 229 SWBs from WVDP. 55-gallon drums may be over-packed in an AMC or TAD; however the SWBs may only be over-packed in a TAD.-

5.5.3 Waste Stream Activities

Table 32 shows the waste stream activities for the GTCC LLW and DOE GTCC-like other waste streams (Trone 2008) (Appendix F). All activities are for the time when waste becomes available for disposal. For stored waste, this is assumed to be 2019.

Table 32. GTCC LLW and DOE GTCC-like Other Waste Stream Activities[a]

Waste Stream	Activity at Time of Availability (Ci)							
	^{14}C	^{54}Mn	^{55}Fe	^{59}Ni	^{60}Co	^{63}Ni	^{90}Sr	^{93}Mo
Stored								
Commercial CH Other Waste (4a)	0.00E+00	0.00E+00	0.00E+00	0.00E+00	0.00E+00	0.00E+00	0.00E+00	0.00E+00
DOE CH Other Waste (4b)	5.60E+03	1.06E-04	2.57E+02	2.90E-04	5.07E+00	3.61E-02	4.17E+03	0.00E+00
Commercial RH Other Waste (4c)	5.62E-03	1.12E-07	1.78E-05	1.07E-01	1.35E+00	4.74E+00	1.07E+03	0.00E+00
DOE RH Other Waste (4d)	6.00E+03	5.66E-04	2.43E+02	9.75E+03	1.29E+04	5.69E+05	3.08E+05	0.00E+00
Subtotal Stored	**1.16E+04**	**6.73E-04**	**5.00E+02**	**9.75E+03**	**1.29E+04**	**5.69E+05**	**3.13E+05**	**0.00E+00**
Projected								
Commercial CH Other Waste (4a)	0.00E+00	0.00E+00	0.00E+00	0.00E+00	0.00E+00	0.00E+00	0.00E+00	0.00E+00
DOE CH Other Waste (4b)	4.44E+03	7.09E+00	7.10E+03	2.34E+02	8.32E+01	6.79E+02	4.89E+03	0.00E+00
Commercial RH Other Waste (4c)	1.71E-04	2.87E-04	1.88E-05	3.25E-03	2.58E-01	1.58E-01	4.55E+01	0.00E+00
DOE RH Other Waste (4d)	2.76E+03	4.41E+00	2.70E+02	2.19E+01	1.98E+02	1.92E+03	7.39E+04	7.77E-03
Subtotal Projected	**7.20E+03**	**1.15E+01**	**7.37E+03**	**2.56E+02**	**2.81E+02**	**2.59E+03**	**7.88E+04**	**7.77E-03**
Total	**1.88E+04**	**1.15E+01**	**7.87E+03**	**1.00E+04**	**1.32E+04**	**5.72E+05**	**3.92E+05**	**7.77E-03**
	^{94}Nb	^{99}Tc	^{137}Cs	^{210}Pb	^{229}Th	^{230}Th	^{233}U	^{235}U
Stored								
Commercial CH Other Waste (4a)	0.00E+00	0.00E+00	5.94E+00	0.00E+00	0.00E+00	0.00E+00	0.00E+00	0.00E+00
DOE CH Other Waste (4b)	3.31E-04	2.11E+02	2.36E+03	3.18E-04	9.34E+02	1.68E+02	6.46E+03	1.29E+01
Commercial RH Other Waste (4c)	0.00E+00	7.43E-01	1.44E+03	3.23E-09	8.60E-04	8.75E-06	5.92E-01	5.10E-03
DOE RH Other Waste (4d)	6.01E+00	9.75E+03	2.65E+05	1.42E-09	4.51E+00	1.65E+00	9.74E+02	1.58E+01
Subtotal Stored	**6.01E+00**	**9.96E+03**	**2.69E+05**	**3.18E-04**	**9.39E+02**	**1.70E+02**	**7.44E+03**	**2.87E+01**
Projected								
Commercial CH Other Waste (4a)	0.00E+00	0.00E+00	0.00E+00	0.00E+00	0.00E+00	0.00E+00	0.00E+00	0.00E+00
DOE CH Other Waste (4b)	2.27E+02	1.73E+02	2.77E+03	6.72E-06	7.39E+02	1.33E+02	5.10E+03	1.02E+01
Commercial RH Other Waste (4c)	0.00E+00	2.25E-02	6.02E+01	1.51E-10	2.61E-05	2.65E-07	1.79E-02	1.54E-04
DOE RH Other Waste (4d)	2.32E-02	1.13E+02	3.92E+05	0.00E+00	4.60E+02	8.28E+01	3.17E+03	6.36E+00
Subtotal Projected	**2.27E+02**	**2.86E+02**	**3.95E+05**	**6.72E-06**	**1.20E+03**	**2.16E+02**	**8.27E+03**	**1.66E+01**
Total	**2.33E+02**	**1.03E+04**	**6.64E+05**	**3.25E-04**	**2.14E+03**	**3.86E+02**	**1.57E+04**	**4.52E+01**

Table 32. GTCC LLW and DOE GTCC-like Other Waste Stream Activities[a] (Continued)

Waste Stream	Activity at Time of Availability (Ci)								
	^{237}Np	^{238}Pu	^{239}Pu	^{240}Pu	^{241}Pu	^{241}Am	^{242}Pu	^{243}Am	^{244}Cm
Stored									
Commercial CH Other Waste (4a)	0.00E+00	0.00E+00	0.00E+00	0.00E+00	0.00E+00	5.01E+00	0.00E+00	0.00E+00	0.00E+00
DOE CH Other Waste (4b)	2.10E+01	4.86E+05	3.74E+05	2.99E+05	4.48E+06	1.32E+06	1.87E+03	1.44E+04	5.81E+02
Commercial RH Other Waste (4c)	3.12E-03	1.59E+01	2.44E+01	7.37E+00	3.10E+02	6.31E+01	2.23E-03	4.62E-03	2.97E+00
DOE RH Other Waste (4d)	7.87E+01	1.16E+04	9.41E+04	7.11E+04	2.23E+05	8.43E+04	2.36E+02	5.26E+03	1.23E+03
Subtotal Stored	**9.97E+01**	**4.98E+05**	**4.68E+05**	**3.70E+05**	**4.71E+06**	**1.40E+06**	**2.11E+03**	**1.96E+04**	**1.81E+03**
Projected									
Commercial CH Other Waste (4a)	0.00E+00	0.00E+00	0.00E+00	0.00E+00	0.00E+00	0.00E+00	0.00E+00	0.00E+00	0.00E+00
DOE CH Other Waste (4b)	1.63E+01	4.28E+05	2.96E+05	2.36E+05	6.94E+06	1.06E+06	1.48E+03	1.14E+04	7.84E+02
Commercial RH Other Waste (4c)	9.47E-05	5.38E-01	7.41E-01	2.24E-01	1.84E+01	1.95E+00	6.77E-05	1.40E-04	1.54E-01
DOE RH Other Waste (4d)	1.65E+01	2.70E+05	1.84E+05	1.47E+05	4.32E+06	6.63E+05	9.20E+02	7.08E+03	5.86E+02
Subtotal Projected	**3.28E+01**	**6.98E+05**	**4.80E+05**	**3.84E+05**	**1.13E+07**	**1.73E+06**	**2.40E+03**	**1.85E+04**	**1.37E+03**
Total	**1.32E+02**	**1.20E+06**	**9.48E+05**	**7.54E+05**	**1.60E+07**	**3.13E+06**	**4.50E+03**	**3.81E+04**	**3.18E+03**

[a]From Trone (2008) (Appendix F). Reported values for stored waste were decayed from 2007 to 2019 to obtain the data in this table.

5.5.4 Shipments, Shipping Containers, and Disposal Packages

Table 33 shows the number of shipments, shipping containers and disposal packages for the GTCC LLW and DOE GTCC-like other waste streams.

5.5.5 Waste Stream Container Activities

Table 34 shows the container activities for the GTCC LLW and DOE GTCC-like other waste streams (Trone 2008) (Appendix F). The table shows the container activities for 55-gallon drum equivalents. Container activities for the other container types can be calculated from the 55-gallon drum equivalent values as follows:

- For an SWB, multiply the drum values by 9
- For an AMC, multiply the drum values by 3
- For a RH canister, multiply the drum values by 3
- For a TAD loaded with 55-gallon drums, multiply the drum values by 9
- For a TAD loaded with SWBs, multiply the drum by 18
- For a TRUPACT-II loaded with 55-gallon drums, multiply the drum values by 14
- For a TRUPACT-II loaded with SWBs, multiply the drum values by 18
- For a CNS8-120B loaded with 55-gallon drums, multiply the drum values by 4
- For a CNS8-120B loaded with SWBs, multiply the drum values by 9
- For RH 72B values, multiply the drum values by 3
- For a NAC-STC loaded with 55-gallon drums, multiply the drum values by 9
- For a NAC-STC loaded with SWBs, multiply the drum values by 18

Table 33. GTCC LLW and DOE GTCC-like Other Waste Stream Shipping Containers, Shipments, and Disposal Packages[a, c]

Number of Shipping Containers				
Waste Stream	**TRUPACT-II**	**TADs (one TAD per NAC-STC)**	**CNS8-120B**	**RH 72B Casks**
Stored				
Commercial CH Other Waste (4a)	16	25	53	NA
DOE CH Other Waste (4b)	139	151	307	NA
Commercial RH Other Waste (4c)	NA	18	NA	53
DOE RH Other Waste (4d)	NA	332	NA	985
Subtotal Stored	155	526	360	1038
Projected				
Commercial CH Other Waste (4a)	0	0	0	NA
DOE CH Other Waste (4b)	487	756	1699	NA
Commercial RH Other Waste (4c)	NA	1	NA	2
DOE RH Other Waste (4d)	NA	647	NA	1935
Subtotal Projected	487	1404	1699	1937
Total	642	1930	2059	2975
Number of Shipments				
Waste Stream	**3 TRUPACT-IIs (on trucks)**	**NAC-STC (on rail cars)**	**CNS8-120B (on rail cars or trucks)**	**RH 72B Casks (on trucks)**
Stored				
Commercial CH Other Waste (4a)	6	25	53	NA
DOE CH Other Waste (4b)	49	151	307	NA
Commercial RH Other Waste (4c)	NA	18	NA	53
DOE RH Other Waste (4d)	NA	332	NA	985
Subtotal Stored	55	526	360	1038
Projected				
Commercial CH Other Waste (4a)	0	0	0	NA
DOE CH Other Waste (4b)	164	756	1699	NA
Commercial RH Other Waste (4c)	NA	1	NA	2
DOE RH Other Waste (4d)	NA	647	NA	1935
Subtotal Projected	164	1404	1699	1937
Total	219	1930	2059	2975

Table 33. GTCC LLW and DOE GTCC-like Other Waste Stream Shipping Containers, Shipments, and Disposal Packages[a, c] (Continued)

Number of Disposal Packages					
Waste Stream	**YM Waste Package**	**7-packs of 55-gallon drums**	**SWBs**	**RH Canisters**	**3-packs of RH Canisters[b]**
Stored					
Commercial CH Other Waste (4a)	25	30	NA	NA	NA
DOE CH Other Waste (4b)	151	46	229	NA	NA
Commercial RH Other Waste (4c)	18	NA	NA	53	18
DOE RH Other Waste (4d)	332	NA	NA	985	329
Subtotal Stored	526	76	229	1038	347
Projected					
Commercial CH Other Waste (4a)	0	0	NA	NA	NA
DOE CH Other Waste (4b)	756	971	NA	NA	NA
Commercial RH Other Waste (4c)	1	NA	NA	2	1
DOE RH Other Waste (4d)	647	NA	NA	1935	645
Subtotal Projected	1404	971	NA	1937	646
Total	1930	1047	229	2975	993

[a]From Trone (2008) (Appendix F); [b]The number of 3-packs of RH canisters is calculated by dividing the number of RH canisters by three and rounding to the nearest integer; [c]The columns in this table represent individual shipping and/or disposal options. The values in the columns represent the number of shipments that would be required if that particular shipping option was chosen or the number of disposal packages that would be produced if the waste was grouped in that particular disposal package.

Table 34. GTCC LLW and DOE GTCC-like Other Waste Stream Container Activities[a]

Waste Stream	Average[b] Activity at Time of Availability (Ci/55-gallon drum equivalent)							
	^{14}C	^{54}Mn	^{55}Fe	^{59}Ni	^{60}Co	^{63}Ni	^{90}Sr	^{93}Mo
Stored								
Commercial CH Other Waste (4a)	0.00E+00	0.00E+00	0.00E+00	0.00E+00	0.00E+00	0.00E+00	0.00E+00	0.00E+00
DOE CH Other Waste (4b)	2.37E+00	4.48E-08	1.09E-01	1.23E-07	2.14E-03	1.52E-05	1.76E+00	0.00E+00
Commercial RH Other Waste (4c)	3.54E-05	7.02E-10	1.12E-07	6.74E-04	8.48E-03	2.98E-02	6.74E+00	0.00E+00
DOE RH Other Waste (4d)	2.04E+00	1.93E-07	8.28E-02	3.32E+00	4.39E+00	1.93E+02	1.05E+02	0.00E+00
Subtotal Stored	**2.05E+00**	**1.19E-07**	**8.83E-02**	**1.72E+00**	**2.28E+00**	**1.00E+02**	**5.53E+01**	**0.00E+00**
Projected								
Commercial CH Other Waste (4a)	0.00E+00	0.00E+00	0.00E+00	0.00E+00	0.00E+00	0.00E+00	0.00E+00	0.00E+00
DOE CH Other Waste (4b)	6.53E-01	1.04E-03	1.04E+00	3.44E-02	1.23E-02	1.00E-01	7.20E-01	0.00E+00
Commercial RH Other Waste (4c)	3.41E-05	5.73E-05	3.77E-06	6.50E-04	5.15E-02	3.16E-02	9.10E+00	0.00E+00
DOE RH Other Waste (4d)	4.77E-01	7.61E-04	4.65E-02	3.78E-03	3.41E-02	3.30E-01	1.27E+01	1.34E-06
Subtotal Projected	**5.72E-01**	**9.14E-04**	**5.85E-01**	**2.03E-02**	**2.23E-02**	**2.06E-01**	**6.26E+00**	**6.17E-07**
Total	**1.03E+00**	**6.30E-04**	**4.31E-01**	**5.48E-01**	**7.23E-01**	**3.13E+01**	**2.15E+01**	**4.26E-07**
	^{94}Nb	^{99}Tc	^{137}Cs	^{210}Pb	^{229}Th	^{230}Th	^{233}U	^{235}U
Stored								
Commercial CH Other Waste (4a)	0.00E+00	0.00E+00	2.86E-02	0.00E+00	0.00E+00	0.00E+00	0.00E+00	0.00E+00
DOE CH Other Waste (4b)	1.88E-08	1.20E-02	1.34E-01	1.81E-08	5.32E-02	9.58E-03	3.68E-01	7.35E-04
Commercial RH Other Waste (4c)	0.00E+00	4.67E-03	9.05E+00	2.03E-11	5.41E-06	5.50E-08	3.72E-03	3.21E-05
DOE RH Other Waste (4d)	2.04E-03	3.32E+00	9.02E+01	4.82E-13	1.53E-03	5.61E-04	3.31E-01	5.36E-03
Subtotal Stored	**1.06E-03**	**1.76E+00**	**4.75E+01**	**5.61E-08**	**1.66E-01**	**3.00E-02**	**1.31E+00**	**5.06E-03**
Projected								
Commercial CH Other Waste (4a)	0.00E+00	0.00E+00	0.00E+00	0.00E+00	0.00E+00	0.00E+00	0.00E+00	0.00E+00
DOE CH Other Waste (4b)	3.34E-02	2.55E-02	4.08E-01	9.90E-10	1.09E-01	1.96E-02	7.50E-01	1.50E-03
Commercial RH Other Waste (4c)	0.00E+00	4.50E-03	1.20E+01	3.02E-11	5.22E-06	5.31E-08	3.59E-03	3.09E-05
DOE RH Other Waste (4d)	4.00E-06	1.95E-02	6.76E+01	0.00E+00	7.93E-02	1.43E-02	5.47E-01	1.10E-03
Subtotal Projected	**1.80E-02**	**2.27E-02**	**3.14E+01**	**5.34E-10**	**9.52E-02**	**1.71E-02**	**6.57E-01**	**1.32E-03**
Total	**1.27E-02**	**5.62E-01**	**3.64E+01**	**1.78E-08**	**1.17E-01**	**2.11E-02**	**8.60E-01**	**2.48E-03**

Table 34. GTCC LLW and DOE GTCC-like Other Waste Stream Container Activities[a] (Continued)

Waste Stream	Average[b] Activity at Time of Availability (Ci/55-gallon drum equivalent)								
	^{237}Np	^{238}Pu	^{239}Pu	^{240}Pu	^{241}Pu	^{241}Am	^{242}Pu	^{243}Am	^{244}Cm
Stored									
Commercial CH Other Waste (4a)	0.00E+00	0.00E+00	0.00E+00	0.00E+00	0.00E+00	2.41E-02	0.00E+00	0.00E+00	0.00E+00
DOE CH Other Waste (4b)	8.88E-03	2.05E+02	1.58E+02	1.26E+02	1.90E+03	5.57E+02	7.91E-01	6.08E+00	2.46E-01
Commercial RH Other Waste (4c)	1.97E-05	1.00E-01	1.54E-01	4.64E-02	1.95E+00	3.97E-01	1.41E-05	2.91E-05	1.87E-02
DOE RH Other Waste (4d)	2.67E-02	3.93E+00	3.20E+01	2.42E+01	7.59E+01	2.87E+01	8.04E-02	1.79E+00	4.17E-01
Subtotal Stored	**1.76E-02**	**8.78E+01**	**8.27E+01**	**6.53E+01**	**8.31E+02**	**2.47E+02**	**3.72E-01**	**3.47E+00**	**3.20E-01**
Projected									
Commercial CH Other Waste (4a)	0.00E+00	0.00E+00	0.00E+00	0.00E+00	0.00E+00	0.00E+00	0.00E+00	0.00E+00	0.00E+00
DOE CH Other Waste (4b)	2.40E-03	6.31E+01	4.35E+01	3.48E+01	1.02E+03	1.57E+02	2.18E-01	1.68E+00	1.15E-01
Commercial RH Other Waste (4c)	1.89E-05	1.08E-01	1.48E-01	4.47E-02	3.69E+00	3.91E-01	1.35E-05	2.80E-05	3.08E-02
DOE RH Other Waste (4d)	2.84E-03	4.66E+01	3.17E+01	2.54E+01	7.46E+02	1.14E+02	1.59E-01	1.22E+00	1.01E-01
Subtotal Projected	**2.60E-03**	**5.55E+01**	**3.81E+01**	**3.05E+01**	**8.95E+02**	**1.37E+02**	**1.90E-01**	**1.47E+00**	**1.09E-01**
Total	**7.26E-03**	**6.55E+01**	**5.19E+01**	**4.13E+01**	**8.75E+02**	**1.71E+02**	**2.47E-01**	**2.09E+00**	**1.74E-01**

[a]From Trone (2008) (Appendix F); Reported values for stored waste were decayed from 2007 to 2019 to obtain the data in this table; [b]An average was calculated by adding the curies from each of the components in a category and dividing by the total number of 55-gallon drum equivalents in the category.

6. REFERENCES

Bohan, C. (2008). GTCC Data Call -Updated Table and Report, Email from Cathy Bohan (WVDP) to Janis Trone (SNL) and George Dixon (DOE) with attachment. ERMS 548720. Department of Energy. West Valley, NY.

CIS-US (2006). IBL-437 Blood Irradiator & DoseWriter Webpage Available at: http://www.cisusinc.com/iblbody.htm. ERMS 545196. Bedford, MA.

Dixon, G. (2006). DOE GTCC, Like Waste Data Call Responses. ERMS 545171.

Dixon, G. (2007). Summary of Greater-Than-Class C (GTCC)-Like Waste Conference Calls Held on April 10, 2007. ERMS 546604. Department of Energy, EM. Washington, DC.

EIA (2005). Energy Information Administration, Reactor Status List. Available at: http://www.eia.doe.gov/cneaf/nuclear/page/nuc_reactors/reactsum.html. United States Energy Information Administration. Washington, D.C.

Energy Solutions (2007). Proof of Concept Design Summary for the Transportation, Aging, and Disposal Canister System. ERMS 546503. Energy Solutions Spent Fuel Division. Campbell, CA.

EPRI (2003a). Interim Storage of Greater Than Class C Low Level Waste, Rev. 1. Electric Power Research Institute. Palo Alto, C.A.

EPRI (2003b). Radiological Characterizations for Reactor Pressure Vessels and Internals Enhanced SAFSTOR. Electric Power Research Institute. Palo Alto, C.A.

EPRI (2005). Naughton, Mike. Personal Communication from EPRI. Electric Power Research Institute.

Hillesheim, M. and K. D. Hendren (2007a). Weight Calculations for a Standard 55 Gallon Drum in Support of the Greater Than Class C Low Level Radioactive Waste Environmental Impact Statement Evaluations, Revision 0. ERMS 546507. Sandia National Laboratories. Carlsbad, NM.

Hillesheim, M. and J. R. Schemerhorn (2007b). Activated Metal Canister Volume and Weight Calculations in Support of the Greater-Than-Class-C Low-Level Radioactive Waste Environmental Impact Statement Evaluations. ERMS 546591. Sandia National Laboratories. Carlsbad, NM.

IAEA (2003). Categorization of Radioactive Sources IAEA-TECDOC-1344. International Atomic Energy Agency. Vienna, Austria.

KAPL (2002). Nuclides and Isotopes, Chart of the Nuclides. Sixteenth Edition. KAPL, Inc.

Leigh, C. D. and B. Fox (2005a). Radionuclides Expected to Dominate Potential Releases in the Performance Assessment Baseline Calculation, Revision 0. ERMS 539643. Sandia National Laboratories. Carlsbad, NM.

Leigh, C. D. and J. R. Trone (2007). Package Configuration for Disposing of Nuclear Utility Greater-Than-Class-C Low-Level Radioactive Waste in the Waste Isolation Pilot Plant (WIPP). ERMS 547011. Sandia National Laboratories. Carlsbad, NM.

Leigh, C. D., J. R. Trone, et al. (2005b). TRU Waste Inventory for the 2004 Compliance Recertification Application Performance Assessment Baseline Calculation. ERMS 541118. Sandia National Laboratories. Carlsbad, NM.

Moody, D. C. (2007). The National TRU Program, An Integrated National Risk Mitigation Approach. ERMS 546603. Department of Energy, Carlsbad Field Office. Carlsbad, NM.

NAC (2007). Transport, Aging and Disposal Canister System Proof of Concept Design Summary Report. ERMS 546504. NAC International, Inc.

NRC (1978). NUREG/CR-0130, Technology, Safety, and Costs of Decommissioning a Reference Pressurized Water Reactor Power Station. Nuclear Regulatory Commission. Washington, D.C.

NRC (1980). NUREG/CR-0672 Technology, Safety, and Costs of Decommissioning a Reference Boiling Water Reactor Power Station. Nuclear Regulatory Commission. Washington, D.C.

NRC (1995). NUREG/CR-5884; PNL-8742, Volume 2. Revised Analysis of Decommissioning for the Reference Pressurized Water Reactor Power Station. Nuclear Regulatory Commission. Washington, D.C.

NRC (1996a). NUREG-1437. Generic Environmental Impact Statement for License Renewal of Nuclear Power Plants. Vol. 1 Chapter 7, Section 7.2.4. Nuclear Regulatory Commission. Washington, D.C.

NRC (1996b). NUREG/CR-6174; PNL-9975. Revised Analysis of Decommissioning for the Reference Boiling Water Reactor Power Station. Nuclear Regulatory Commission. Washington, D.C.

NRC (2006). NUREG-1350. NRC 2006-2007 Information Digest. Vol. 18, Appendix B. ERMS 545189. Nuclear Regulatory Commission. Washington, D. C.

OSRP (2005). Storage Capabilities. Available at: http://osrp.lanl.gov/facilities.shtml. Off-Site Source Recovery Project.

Ragan, G. (2002). Radionuclide Screening. ERMS 547008. U. S. Department of Energy, Office of Civilian Radioactive Waste Management. Las Vegas, NV.

RAMPAC (2006). Radioactive Material Packaging (RAMPAC) Website. Available at: http://www.rampac.com. United States Department of Energy.

Schelling, J. (2006).

Schelling, J., C. D. Leigh, et al. (2007a). Supporting Nuclear Utility Inventory Estimates for the Greater-Than-Class-C Low-Level Radioactive Waste Environmental Impact Statement Evaluations. ERMS 547023. Sandia National Laboratories. Carlsbad, NM.

Schelling, J. and J. R. Trone (2007b). Supporting Sealed Source Waste Inventory Estimates for the Greater-Than-Class-C Low-Level Radioactive Waste Environmental Impact Statement Evaluations. ERMS 547020. Sandia National Laboratories. Carlsbad, NM.

SNL (2004). Basic Guide to RTR Radioactive Materials. Rev. 2,. Sandia National Laboratories. Albuquerque, NM.

SNL (2006). Planning Memorandum - Task 3.2 Establish Basis Inventory. ERMS 545173. Sandia National Laboratories. Carlsbad, N.M.

Sprung, J. L., D. J. Ammerman, et al. (2001). NUREG/CR-6672. SAND2001-2672C. Sandia National Laboratories. Albuquerque, N.M.

TN (2007). TN TAD Canister System Proof of Concept Design Report, Revision A, 30552-0101. Transnuclear, Inc. Columbia, MD.

Trone, J. R. (2008). Supporting Other Miscellaneous Waste Inventory Estimates for the Greater-Than-Class-C Low -Level Radioactive Waste Environmental Impact Statement Evaluations. ERMS 549006. Sandia National Laboratories. Carlsbad, NM.

Trone, J. R. and K. Hendren (2007). Calculation of the Loaded Weight of the RH Canister for the Greater-Than-Class C Low-Level Radioactive Waste Environmental Impact Statement Evaluations. ERMS 547014. Sandia National Laboratories. Carlsbad, NM.

U. S. DOE (1994). Greater-Than-Class C Low-Level Radioactive Waste Characterization: Estimated Volumes, Radionuclide Activities, and Other Characteristics. DOE/LLW-114 Rev. 01 ERMS 511970. United States Department of Energy. Idaho Falls, I.D.

U. S. DOE (1995). Integrated Data Base Report - 1994: U.S. Spent Nuclear Fuel and Radioactive Waste Inventories, Projections, and Characteristics. DOE/RW-0006 Rev. 11. United States Department of Energy Office of Environmental Management.

U. S. DOE (2001). Yucca Mountain Science and Engineering Report, DOE/RW-0539 Rev. 1. DOE/RW-0539. Department of Energy.

U. S. DOE (2002). Final Environmental Impact Statement for a Geologic Repository for the Disposal of Spent Nuclear Fuel and High-Level Radioactive Waste at Yucca Mountain, DOE/EIS-0250F. U. S. Department of Energy. Nye County, Nevada.

U. S. DOE (2005a). Contact-Handled Transuranic Waste Acceptance Criteria for the Waste Isolation Pilot Plant, Rev. 3. United States Department of Energy Carlsbad Field Office. Carlsbad, N.M.

U. S. DOE (2005b). TRUPACT-II Safety Analysis Report, Revision 21. United States Department of Energy Carlsbad Field Office. Carlsbad, NM.

U. S. DOE (2006a). CH-TRAMPAC, Revision 2. United States Department of Energy Carlsbad Field Office. Carlsbad, NM.

U. S. DOE (2006b). RH 72-B Safety Analysis Report, Revision 4. Department of Energy.

U. S. DOE (2007a). Greater-Than-Class C Low-Level Radioactive Waste and DOE Greater-Than-Class C-Like Waste Inventory Estimates. U. S. Department of Energy. Washington, DC.

U. S. DOE (2007b). Transportation Aging and Disposal Canister System Performance Specification, Revision 0, Doc ID:WMO-TADSCS-000001. ERMS 546506. U. S. Department of Energy, Office of Civilian Radioactive Waste Management.

Weiner, R. F., D. Osborn, et al. (2007). Supporting Shielding Calculations for the Greater Than Class C Low Level Radioactive Waste Environmental Impact Statement Evaluations, Revision 2. ERMS 546367. Sandia National Laboratories. Albuquerque, NM.

APPENDIX A
CALCULATION OF SHIPMENTS, SHIPPING CONTAINERS, AND DISPOSAL PACKAGES FOR SEALED SOURCES

Table A.1. Shipments and Containers for Sealed Sources

Generator	Waste Stream	Isotope	Number of Sources	55-gallon Drums[a]	Volume (m^3)[b]	Four-packs[c]	Seven-packs[d]	TRUPACTS[e]	TRUPACT Shipments[f]	CNS8-120B Shipments[g]	AMCs[h]	TADs[i]
Stored												
DOE	2b	^{244}Cm[c]	13	1	0.21	NA	1	1	1	1	1	1
Commercial	2c	^{137}Cs	0	NA	0	0	NA	0	0	0	NA	0
DOE	2d	^{137}Cs	6	NA	4.26	2	NA	3	1	3	NA	1
DOE	2d	^{137}Cs	1	NA	0.71	1	NA	1	1	1	NA	1
DOE	2d	^{137}Cs	3	NA	2.13	1	NA	2	1	2	NA	1
DOE	2d	^{137}Cs	1	NA	0.71	1	NA	1	1	1	NA	1
DOE	2d	^{137}Cs	1	NA	0.71	1	NA	1	1	1	NA	1
Subtotal Stored				1	8.73	6	1	9	6	9	1	6
Projected												
Commercial	2a	$^{238}Pu/Be$[b]	8,364	1269	263.95	NA	182	91	31	318	423	141
Commercial	2a	$^{239}Pu/Be$[b]	1,819	270	56.16	NA	39	20	7	68	90	30
Commercial	2a	$^{241}Am/Be$[b]	44,079	1593	331.34	NA	228	114	38	399	531	177
Commercial	2a	^{244}Cm[c]	1	1	0.21	NA	1	1	1	1	1	1
DOE	2b	^{240}Pu[b]	1	1	0.21	NA	1	1	1	1	1	1
DOE	2b	^{243}Am[b]	1	1	0.21	NA	1	1	1	1	1	1
DOE	2b	^{244}Cm[c]	7	1	0.21	NA	1	1	1	1	1	1
Commercial	2c	^{137}Cs[c]	1435	NA	1018.85	359	NA	718	240	718	NA	240
DOE	2d	^{137}Cs[c]	3	NA	2.13	1	NA	2	1	2	NA	1
DOE	2d	^{137}Cs[c]	2	NA	1.42	1	NA	1	1	1	NA	1
DOE	2d	^{137}Cs[c]	5	NA	3.55	2	NA	3	1	3	NA	1
DOE	2d	^{137}Cs[c]	3	NA	2.13	1	NA	2	1	2	NA	1

Table A.1. Shipments and Containers for Sealed Sources (continued)

Generator	Waste Stream	Isotope	Number of Sources	55-gallon Drums[a]	Volume (m^3)[b]	Four-packs[c]	Seven-packs[d]	TRUPACTS[e]	TRUPACT Shipments[f]	CNS8-120B Shipments[g]	AMCs[h]	TADs[i]
DOE	2d	^{137}Cs[c]	7	NA	4.97	2	NA	4	2	4	NA	2
DOE	2d	^{137}Cs[c]	2	NA	1.42	1	NA	1	1	1	NA	1
DOE	2d	^{137}Cs[c]	2	NA	1.42	1	NA	1	1	1	NA	1
DOE	2d	^{137}Cs[c]	2	NA	1.42	1	NA	1	1	1	NA	1
DOE	2d	^{137}Cs[c]	1	NA	0.71	1	NA	1	1	1	NA	1
DOE	2d	^{137}Cs[c]	7	NA	4.97	2	NA	4	2	4	NA	2
Subtotal Projected				3136	1695.28	372	453	967	332	1527	1048	604
Total				3137	1704.01		454	976	338	1536	1049	610

[a]From Schelling and Trone (2007b) (Appendix I); [b]Calculated as the number of drums times the volume per drum (0.208 m^3 per drum); [c]Calculated as the number of drums divided by four rounded up to the nearest integer; [d]Calculated as the number of drums divided by seven rounded up to the nearest integer; [e]Calculated as the number of seven-packs divided by two rounded up to the nearest integer; [f]Calculated as the number of TRUPACTs divided by three rounded p to the nearest integer; [g]Calculated as the number of drums divided by four rounded p to the nearest integer; [h]Calculated as the number of drums divided by three rounded p to the nearest integer; [i]Calculated as the number of AMCs divided by three rounded p to the nearest integer.

APPENDIX B
DOE GTCC-LIKE ACTIVATED METALS INCLUDED IN THE INVENTORY FOR THE GTCC LLW EIS

In response to the 2005 DOE data call, INL and ORNL submitted data on DOE-owned activated metals that have characteristics like GTCC LLW (Dixon 2006). The inventory information was prepared and sent back to the generator sites for verification. The resulting verified inventory is documented in Dixon (2007). Unpackaged volumes were reported by both sites. All of the DOE activated metal waste that is being included in the inventory for the GTCC LLW EIS is shown in Table B.1.

Activities for the waste identified in Table B.1 were either taken directly from or derived from information submitted by INL and ORNL in the DOE data call (Dixon 2006).

INL submitted radionuclide activities in their response to the data call (Dixon 2006) for the following activated metals: 4468N-ATR-metals, ATR-Be, and the three items RSWF-RTP-CDR-001, RSWF-RTP-CDR-002, and RSWF-RTP-CDR-004. Activities for the stored activated metal wastes at INL were decayed from 2005 to 2019.

Activity concentrations (Ci/m^3) for a large number of radionuclides were given for the Advanced Test Reactor (ATR) (Attachment 3 of submission 3 out of 6) for ATR components considered to be GTCC-Like waste. The maximum value from all of the components listed was selected for each radionuclide to obtain a conservative estimate of the total activity concentration. The conservative activity value was multiplied by the unpackaged volume from Table B.1 for the 4468N-ATR-metals to obtain the activities shown in Table B.2 for the main radionuclides being tracked in this analysis.

For the ATR-Be activated metal parts containing beryllium, activity concentrations (Ci/m^3) were given for the following twenty radionuclides: ^{241}Am, ^{243}Am, ^{14}C, ^{244}Cm, ^{60}Co, ^{137}Cs, ^{94}Nb, ^{59}Ni, ^{63}Ni, ^{237}Np, ^{238}Pu, ^{239}Pu, ^{240}Pu, ^{241}Pu, ^{242}Pu, ^{90}Sr, ^{99}Tc, ^{233}U, ^{234}U, and ^{238}U. These values were multiplied by the unpackaged volume to obtain the activities shown in Table B.2 for the main radionuclides being tracked in this analysis.

For the three RSWF-RTP-CDR items, activity concentrations (Ci/m^3) were given for ^{60}Co, ^{94}Nb, and ^{99}Tc, which were multiplied by the unpackaged volumes to obtain the activities shown in Table B.2 for the main radionuclides being tracked in this analysis.

ORNL submitted radionuclide activities in their response to the data call (Dixon 2007) for two groups of items associated with beryllium reflectors, including the following fourteen radionuclides (different radionuclides were identified for different items): ^{14}C, ^{58}Co, ^{60}Co, ^{51}Cr, ^{152}Eu, ^{154}Eu, ^{155}Eu, ^{55}Fe, ^{59}Fe, ^{3}H, ^{54}Mn, ^{63}Ni, ^{204}Tl, and ^{65}Zn. Activities for the main radionuclides being tracked in this analysis are shown in Table B.2. Activities for these stored wastes were decayed from 2005 to 2019.

Table B.1. DOE GTCC-Like Activated Metals Included in the Inventory for the GTCC LLW EIS

Generator Site	Status	Waste Stream/Type	Waste Identifier	Unpackaged Volume (m^3)[a]	Packaged Volume (m^3)[b]
INL	Stored	Activated Metal Parts from Reactors	4468N-ATR-metals	0.25	0.33
INL	Stored	Activated Metal Parts from Reactors	ATR-BE	2.50	3.33
			Subtotal	**2.75**	**3.67**
ORNL	Stored	Activated Metal Parts from Reactors	HFIR - Permanent Beryllium Reflector (NPD)	1.60	2.13
ORNL	Stored	Activated Metal Parts from Reactors	HFIR - Permanent Beryllium Reflector	0.60	0.80
			Subtotal	**2.20**	**2.93**
			Stored Subtotal	**4.95**	**6.60**
INL	Projected	Activated Metal Parts from Reactors	ATR-BE	4.90	6.53
INL	Projected	Activated Metal Parts from Reactors	RSWF-RTP-CDR-001	2.09	2.79
INL	Projected	Activated Metal Parts from Reactors	RSWF-RTP-CDR-002	19.82	26.43
INL	Projected	Activated Metal Parts from Reactors	RSWF-RTP-CDR-004	1.92	2.56
			Subtotal	**28.7**	**38.3**
			Projected Subtotal	**28.7**	**38.3**
			Total (Stored and Projected)	**33.7**	**44.9**

[a]From Dixon (Dixon 2006); [b]Packaged volumes were calculated assuming a packaging factor of 1.33. The assumption is based on appendices E of NUREG/CR-6174 (NRC 1996b) and NUREG/CR-5884 (NRC 1995), which provide details of the analyses used to estimate packaged disposal volumes for a boiling water reactor (BWR) and a pressurized water reactor (PWR), respectively. The appendices describe the dimensions of individual components, an approach to cutting up large parts and packaging them into rectangular canisters, and the size of the packaging canisters. For the BWR, the canister dimensions were 9”x9”x178”, resulting in an internal volume of 0.24 m^3. The GTCC component volume of 5.364 m^3 was packaged into 29 canisters, implying a 78% packaging efficiency (22% empty volume) or a packaging factor of 1.28. Similarly, for the PWR, the canister dimensions were 9”x9”x180” (0.24m^3), and the GTCC LLW component volume of 8.415m^3 was packaged into 46 canisters, implying a 76% packaging efficiency (24% empty volume) or a packaging factor of 1.31.

Table B.2. DOE GTCC-Like Activated Metals Activity Summary

Waste Identifier	^{14}C	^{54}Mn	^{55}Fe	^{59}Ni	^{60}Co	^{63}Ni	^{93}Mo	^{94}Nb
STORED CURIES AS OF 2005[a]								
4468N-ATR-metals	0.00E+00	0.00E+00	0.00E+00	0.00E+00	0.00E+00	0.00E+00	0.00E+00	0.00E+00
ATR-BE	5.47E+01	0.00E+00	0.00E+00	6.03E-01	7.41E+02	1.21E+02	0.00E+00	1.77E-03
HFIR – Permanent Beryllium Reflector (NPD)	1.42E+02	4.60E-01	3.68E+03	0.00E+00	2.91E+03	6.73E+01	0.00E+00	0.00E+00
HFIR – Permanent Beryllium Reflector	0.00E+00	0.00E+00	6.99E+00	0.00E+00	4.88E+02	1.99E+01	0.00E+00	0.00E+00
Subtotal	**1.96E+02**	**4.60E-01**	**3.69E+03**	**6.03E-01**	**4.14E+03**	**2.08E+02**	**0.00E+00**	**1.77E-03**
STORED CURIES AS OF 2019[b]								
4468N-ATR-metals	0.00E+00	0.00E+00	0.00E+00	0.00E+00	0.00E+00	0.00E+00	0.00E+00	0.00E+00
ATR-BE	5.47E+01	0.00E+00	0.00E+00	6.03E-01	1.18E+02	1.10E+02	0.00E+00	1.77E-03
HFIR – Permanent Beryllium Reflector (NPD)	1.41E+02	5.43E-06	1.05E+02	0.00E+00	4.62E+02	6.11E+01	0.00E+00	0.00E+00
HFIR – Permanent Beryllium Reflector	0.00E+00	0.00E+00	2.00E-01	0.00E+00	7.74E+01	1.81E+01	0.00E+00	0.00E+00
Subtotal	**1.96E+02**	**5.43E-06**	**1.06E+02**	**6.03E-01**	**6.57E+02**	**1.89E+02**	**0.00E+00**	**1.77E-03**
PROJECTED CURIES AT TIME OF GENERATION[a]								
ATR-BE	4.87E+02	0.00E+00	0.00E+00	2.50E+00	3.82E+03	6.05E+02	0.00E+00	1.13E-02
RSWF-RTP-CDR-001	0.00E+00	0.00E+00	0.00E+00	0.00E+00	6.01E+04	0.00E+00	0.00E+00	2.40E+00
RSWF-RTP-CDR-002	0.00E+00	0.00E+00	0.00E+00	0.00E+00	5.72E+05	0.00E+00	0.00E+00	2.28E+01
RSWF-RTP-CDR-004	0.00E+00	0.00E+00	0.00E+00	0.00E+00	1.68E+03	0.00E+00	0.00E+00	1.16E+01
Subtotal	**4.87E+02**	**0.00E+00**	**0.00E+00**	**2.50E+00**	**6.37E+05**	**6.05E+02**	**0.00E+00**	**3.68E+01**

[a]From Dixon (2006). [b]Decayed radionuclide activities are calculated using Equation 3.

Table B.3. Estimated Canister Numbers For DOE GTCC-like Activated Metals

Status	Waste Stream	Site	Packaged Volume (m^3)[a]	Number AMCs (@0.94m^3) [b]	Number SAMCs (@0.30m^3) [c]	Number h-SAMCs (@0.196m^3 per)[d]	Number RH Canisters (@ 0.89 m^3 per)[e]
Current	4468N-ATR-metals	INL	3.34E-01	1	2	2	1
Current	ATR-BE	INL	3.33E+00	4	12	18	4
Current	HFIR – Permanent Beryllium Reflector (NPD)	ORNL	2.13E+00	3	8	11	3
Current	HFIR – Permanent Beryllium Reflector	ORNL	8.00E-01	1	3	5	1
		Stored	**6.60E+00**	**9**	**25**	**36**	**9**
Future	ATR-BE	INL	6.53E+00	7	22	34	8
Future	RSWF-RTP-CDR-001	INL	2.78E+00	3	10	15	4
Future	RSWF-RTP-CDR-002	INL	2.64E+01	29	88	135	30
Future	RSWF-RTP-CDR-004	INL	2.56E+00	3	9	14	3
		Projected	**3.83E+01**	**42**	**129**	**198**	**45**
		Total	**4.49E+01**	**51**	**154**	**234**	**54**

[a]From Table B.1; [b]Calculated by dividing the volume by 0.94 m^3 and rounding up to the nearest integer; [c]Calculated by dividing the volume by 0.30 m^3 and rounding up to the nearest integer; [d]Calculated by dividing the activity of ^{60}Co from Table B.2 by 4023 Ci and rounding up to the nearest integer; [e]Calculated by dividing the activity of ^{60}Co from Table B.2 by 23 Ci and rounding up to the nearest integer.

Table B.4. Estimated GTCC LLW Shipments for DOE GTCC-like Activated Metals

Status	Waste Stream	Site	Packaged Volume (m^3)[a]	Number Shipping Containers and Number of Shipments			
				AMCs Rail Only in NAC-STC[b]	SAMCs Rail Only in NAC-STC[c]	h-SAMCs Truck Only in CNS3-55 d	RH Canisters Truck Only in RH 72B[e]
Current	4468N-ATR-metals	INL	3.34E-01	1	1	2	1
Current	ATR-BE	INL	3.33E+00	2	4	18	4
Current	HFIR – Permanent Beryllium Reflector (NPD)	ORNL	2.13E+00	1	3	11	3
Current	HFIR – Permanent Beryllium Reflector	ORNL	8.00E-01	1	1	5	1
		Stored	**6.60E+00**	**5**	**9**	**36**	**9**
Future	ATR-BE	INL	6.53E+00	3	8	34	8
Future	RSWF-RTP-CDR-001	INL	2.78E+00	1	4	15	4
Future	RSWF-RTP-CDR-002	INL	2.64E+01	10	30	135	30
Future	RSWF-RTP-CDR-004	INL	2.56E+00	1	3	14	3
		Projected	**3.83E+01**	**15**	**45**	**198**	**45**
		Total	**4.49E+01**	**20**	**54**	**234**	**54**

[a]From Table B.1; [b]Calculated by dividing the number of AMCs from Table B.3 by three and rounding up to the nearest integer; [c]Calculated by dividing the number of SAMCs from Table B.3 by three and rounding up to the nearest integer; [d]Calculated by dividing the number of h-SAMCs from Table B.3 by one and rounding up to the nearest integer; [e]Calculated by dividing the number of RH canisters from Table B.3 by one and rounding up to the nearest integer.

Table B.5. Estimated DOE GTCC-like Activated Metals Disposal Packages For Various Disposal Configurations

Status	Waste Stream	Site	Packaged Volume (m^3)[a]	Number of 3-packs			Number of 7-packs
				AMCs[b]	SAMCs[c]	Half-SAMCs[d]	Half-SAMCs[e]
Current	4468N-ATR-metals	INL	3.34E-01	1	1	1	1
Current	ATR-BE	INL	3.33E+00	2	4	6	3
Current	HFIR – Permanent Beryllium Reflector (NPD)	ORNL	2.13E+00	1	3	4	2
Current	HFIR – Permanent Beryllium Reflector	ORNL	8.00E-01	1	1	2	1
		Stored	**6.60E+00**	**5**	**9**	**13**	**7**
Future	ATR-BE	INL	6.53E+00	3	8	12	5
Future	RSWF-RTP-CDR-001	INL	2.78E+00	1	4	5	3
Future	RSWF-RTP-CDR-002	INL	2.64E+01	10	30	45	20
Future	RSWF-RTP-CDR-004	INL	2.56E+00	1	3	5	2
		Projected	**3.83E+01**	**15**	**45**	**67**	**30**
		Total	**4.49E+01**	**20**	**54**	**80**	**37**

[a]From Table B.1; [b]Calculated by dividing the number of AMCs from Table B.3 by three and rounding up to the nearest integer; [c]Calculated by dividing the number of SAMCs from Table B.3 by three and rounding up to the nearest integer; [d]Calculated by dividing the number of h-SAMCs from Table B.3 by three and rounding up to the nearest integer; [e]Calculated by dividing the number of h-SAMCs from Table B.3 by three and rounding up to the nearest integer.

Table B.6. Estimated Container Activities For DOE GTCC-like Activated Metals - AMCs

Status	Waste Stream	Site	No. AMCs[a]	Curies/Container[b]							
				^{14}C	^{54}Mn	^{55}Fe	^{59}Ni	^{60}Co	^{63}Ni	^{93}Mo	^{94}Nb
Current	4468N-ATR-metals	INL	1	0.00E+00	0.00E+00	0.00E+00	0.00E+00	0.00E+00	0.00E+00	0.00E+00	0.00E+00
Current	ATR-BE	INL	4	1.37E+01	0.00E+00	0.00E+00	1.51E-01	2.94E+01	2.75E+01	0.00E+00	4.42E-04
Current	HFIR – Permanent Beryllium Reflector (NPD)	ORNL	3	4.71E+01	1.81E-06	3.51E+01	0.00E+00	1.54E+02	2.04E+01	0.00E+00	0.00E+00
Current	HFIR – Permanent Beryllium Reflector	ORNL	1	0.00E+00	0.00E+00	2.00E-01	0.00E+00	7.74E+01	1.81E+01	0.00E+00	0.00E+00
Future	ATR-BE	INL	7	6.96E+01	0.00E+00	0.00E+00	3.57E-01	5.45E+02	8.64E+01	0.00E+00	1.62E-03
Future	RSWF-RTP-CDR-001	INL	3	0.00E+00	0.00E+00	0.00E+00	0.00E+00	2.00E+04	0.00E+00	0.00E+00	7.99E-01
Future	RSWF-RTP-CDR-002	INL	29	0.00E+00	0.00E+00	0.00E+00	0.00E+00	1.97E+04	0.00E+00	0.00E+00	7.86E-01
Future	RSWF-RTP-CDR-004	INL	3	0.00E+00	0.00E+00	0.00E+00	0.00E+00	5.60E+02	0.00E+00	0.00E+00	3.87E+00

[a]From Table B.3; [b]Calculated by dividing the activity from Table B.2 by the number of AMCs.

Table B.7. Estimated Container Activities For DOE GTCC-like Activated Metals –SAMCs

Status	Waste Stream	Site	No. SAMCs[a]	Curies/Container[b]							
				^{14}C	^{54}Mn	^{55}Fe	^{59}Ni	^{60}Co	^{63}Ni	^{93}Mo	^{94}Nb
Current	4468N-ATR-metals	INL	2	0.00E+00	0.00E+00	0.00E+00	0.00E+00	0.00E+00	0.00E+00	0.00E+00	0.00E+00
Current	ATR-BE	INL	12	4.55E+00	0.00E+00	0.00E+00	5.03E-02	9.79E+00	9.17E+00	0.00E+00	1.47E-04
Current	HFIR – Permanent Beryllium Reflector (NPD)	ORNL	8	1.77E+01	6.79E-07	1.32E+01	0.00E+00	5.77E+01	7.64E+00	0.00E+00	0.00E+00
Current	HFIR – Permanent Beryllium Reflector	ORNL	3	0.00E+00	0.00E+00	6.67E-02	0.00E+00	2.58E+01	6.03E+00	0.00E+00	0.00E+00
Future	ATR-BE	INL	22	2.21E+01	0.00E+00	0.00E+00	1.14E-01	1.73E+02	2.75E+01	0.00E+00	5.15E-04
Future	RSWF-RTP-CDR-001	INL	10	0.00E+00	0.00E+00	0.00E+00	0.00E+00	6.01E+03	0.00E+00	0.00E+00	2.40E-01
Future	RSWF-RTP-CDR-002	INL	88	0.00E+00	0.00E+00	0.00E+00	0.00E+00	6.49E+03	0.00E+00	0.00E+00	2.59E-01
Future	RSWF-RTP-CDR-004	INL	9	0.00E+00	0.00E+00	0.00E+00	0.00E+00	1.87E+02	0.00E+00	0.00E+00	1.29E+00

[a]From Table B.3; [b]Calculated by dividing the activity from Table B.2 by the number of SAMCs.

Table B.8. Estimated Container Activities For DOE GTCC-like Activated Metals – h-SAMCs

Status	Waste Stream	Site	No. h-SAMCs[a]	Curies/Container[b]							
				^{14}C	^{54}Mn	^{55}Fe	^{59}Ni	^{60}Co	^{63}Ni	^{93}Mo	^{94}Nb
Current	4468N-ATR-metals	INL	2	0.00E+00	0.00E+00	0.00E+00	0.00E+00	0.00E+00	0.00E+00	0.00E+00	0.00E+00
Current	ATR-BE	INL	18	3.04E+00	0.00E+00	0.00E+00	3.35E-02	6.53E+00	6.11E+00	0.00E+00	9.82E-05
Current	HFIR – Permanent Beryllium Reflector (NPD)	ORNL	11	1.29E+01	4.93E-07	9.57E+00	0.00E+00	4.20E+01	5.56E+00	0.00E+00	0.00E+00
Current	HFIR – Permanent Beryllium Reflector	ORNL	5	0.00E+00	0.00E+00	4.00E-02	0.00E+00	1.55E+01	3.62E+00	0.00E+00	0.00E+00
Future	ATR-BE	INL	34	1.43E+01	0.00E+00	0.00E+00	7.36E-02	1.12E+02	1.78E+01	0.00E+00	3.33E-04
Future	RSWF-RTP-CDR-001	INL	15	0.00E+00	0.00E+00	0.00E+00	0.00E+00	4.01E+03	0.00E+00	0.00E+00	1.60E-01
Future	RSWF-RTP-CDR-002	INL	135	0.00E+00	0.00E+00	0.00E+00	0.00E+00	4.23E+03	0.00E+00	0.00E+00	1.69E-01
Future	RSWF-RTP-CDR-004	INL	14	0.00E+00	0.00E+00	0.00E+00	0.00E+00	1.20E+02	0.00E+00	0.00E+00	8.30E-01

[a]From Table B.3. [b]Calculated by dividing the activity from Table B.2 by the number of h-SAMCs.

Table B.9. Estimated Container Activities for DOE GTCC-like Activated Metals– RH Canisters

Status	Waste Stream	Site	No. RH Canisters[a]	Curies/Container[b]							
				^{14}C	^{54}Mn	^{55}Fe	^{59}Ni	^{60}Co	^{63}Ni	^{93}Mo	^{94}Nb
Current	4468N-ATR-metals	INL	1	0.00E+00	0.00E+00	0.00E+00	0.00E+00	0.00E+00	0.00E+00	0.00E+00	0.00E+00
Current	ATR-BE	INL	4	1.37E+01	0.00E+00	0.00E+00	1.51E-01	2.94E+01	2.75E+01	0.00E+00	4.42E-04
Current	HFIR – Permanent Beryllium Reflector (NPD)	ORNL	3	4.71E+01	1.81E-06	3.51E+01	0.00E+00	1.54E+02	2.04E+01	0.00E+00	0.00E+00
Current	HFIR – Permanent Beryllium Reflector	ORNL	1	0.00E+00	0.00E+00	2.00E-01	0.00E+00	7.74E+01	1.81E+01	0.00E+00	0.00E+00
Future	ATR-BE	INL	8	6.09E+01	0.00E+00	0.00E+00	3.13E-01	4.77E+02	7.56E+01	0.00E+00	1.42E-03
Future	RSWF-RTP-CDR-001	INL	4	0.00E+00	0.00E+00	0.00E+00	0.00E+00	1.50E+04	0.00E+00	0.00E+00	5.99E-01
Future	RSWF-RTP-CDR-002	INL	30	0.00E+00	0.00E+00	0.00E+00	0.00E+00	1.91E+04	0.00E+00	0.00E+00	7.60E-01
Future	RSWF-RTP-CDR-004	INL	3	0.00E+00	0.00E+00	0.00E+00	0.00E+00	5.60E+02	0.00E+00	0.00E+00	3.87E+00

[a]From Table B.3. [b]Calculated by dividing the activity from Table B.2 by the number of RH canisters.

APPENDIX C

Weight Calculations for a Standard 55 Gallon Drum in Support of the Greater Than Class C Low Level Radioactive Waste Environmental Impact Statement Evaluations

Hillesheim, M. and K. D. Hendren

Weight Calculations for a Standard 55 Gallon Drum in Support of the Greater-Than-Class-C Low-Level Radioactive Waste Environmental Impact Statement Evaluations

Author:	Keith Hendren		7/18/07
	Print	Signature	Date
Author:	Michael Hillesheim		7/18/07
	Print	Signature	Date
Technical Review:	Brian Fox		7/18/07
	Print	Signature	Date
Management Review:	Christi Leigh		7/18/07
	Print	Signature	Date

CONTENTS

1. INTRODUCTION 4

2. WASTE PACKAGE 4

3. CALCULATED WEIGHTS 4

4. REFERENCES 5

TABLES

Table 1. Weight of a single SSD filled with grout or concrete 4

ACRONYMS AND ABBREVIATIONS

DOE	U.S. Department of Energy
EIS	Environmental Impact Statement
GTCC	Greater-Than-Class-C
LLW	Low-Level Radioactive Waste
SSD	Standard Steel 55 Gallon Drum

1. INTRODUCTION

The purpose of this report was to research the standard steel 55-gallon drum (SSD) as a possible storage container option for Greater-Than Class C (GTCC) Low-Level Nuclear Waste (LLW). It is proposed that an amount (yet to be determined) of GTCC LLW will be inserted into a SSD and then grouted in place.[1] The SSD will then be packaged for shipping for transport to the disposal facility. This report was written in support of the environmental impact statement (EIS) to evaluate the potential environmental impacts from the construction, operation, closure and post-closure performance of a disposal facility for GTCC LLW and potentially Department of Energy (DOE) GTCC-like waste.[2]

2. WASTE PACKAGE

The SSD, for this analysis, has a nominal internal volume of 55 U.S. gallons (0.208 m^3), with an outside diameter of 23.125 in. (0.587 m), and a height of 34.5 in. (0.876 m). The weight of a SSD varies depending on the thickness of the steel used in its construction; for this analysis, it was assumed the SSD is made of 16-gauge steel (0.002 m thick). The empty weight of the SSD is 65.0 lbs (29.50 kg).

3. CALCULATED WEIGHTS

The average reported densities for grout and concrete are 1900 kg/m^3 (BIA, 2007) and 2400 kg/m^3 (PCA, 2007), respectively. The weight of a SSD filled with grout or concrete was calculated using the following formula. Results are presented in Table 1.

$$W_{Tx} = (V_D \times \rho_x) + W_D \tag{4}$$

Where,

W_{Tx} = Total weight of a SSD filled with grout (x = g) or concrete (x = c) [kg]
V_D = Internal Volume of SSD [m^3]
ρ_x = density of grout (x = g) or concrete (x = c) [kg/m^3]
W_D = Weight of empty SSD [29.50 kg]

Table 1. Weight of a single SSD filled with grout or concrete

Type of Fill Material	Weight (kg)	Weight (ton)	Weight (lb)
Grout (g)	424.70	0.47	934.34
Concrete (c)	528.70	0.58	1163.14

[1] This document neglects the weight and volume of any GTCC LLW to be stored in a SSD.
[2] DOE GTCC-like waste include DOE-owned waste having characteristics similar to GTCC LLW for which there is currently no disposal path.

Conversions
1 kg = 0.0011 ton
1 kg = 2.20 lb
1 in = 0.0254 m
1 gallon = 0.0038 m^3

4. REFERENCES

Portland Cement Association (PCA), 2007, Concrete Technology, www.cement.org.

Brick Industry Association (BIA), 2007, Technical Notes on Brick Construction, www.brickinfo.org.

APPENDIX D

Activated Metal Canister Volume and Weight Calculations in Support of the Greater-Than-Class-C Low-Level Radioactive Waste Environmental Impact Statement Evaluations

Hillesheim, M. and J. R. Schemerhorn

546591

EIS PRIVELGED

Activated Metal Canister Volume and Weight Calculations in Support of the Greater-Than-Class-C Low-Level Radioactive Waste Environmental Impact Statement Evaluations

	Print	Signature	Date
Author:	Michael Hillesheim		7-19-07
Author:	Jon Schermerhorn		7-19-07
Technical Review:	Janis Trone		8/1/07
Management Review:	Christi Leigh		7-19-07

AR 8/15/07
545078
GTCC-EIS: ~~QA~~: 3. 2: ~~545062~~

CONTENTS

1. INTRODUCTION 5

2. WASTE PACKAGES.....5

3. CALCULATED VOLUMES.....6

4. CALCULATED WEIGHTS.....6

5. REFERENCES 7

APPENDIX A: Volume Calculations

APPENDIX B: Weight Calculations of Empty Canisters

APPENDIX C: Weight Calculations of Full Canisters

TABLES

Table 1. Exterior dimensions of the AMC 5

Table 2. Empty canister weights (in tons) 6

Table 3. Full canister weights (in tons) 6

Table A.1. Shell volumes for both of the GTCC LLW canisters

Table A.2. Internal volumes for both of the GTCC LLW canisters

Table B.1. Empty Weight for both of the GTCC LLW canisters

Table C.1. Full Weight for both of the GTCC LLW canisters

FIGURES

Figure 1. Schematic diagram of a.) AMC and b.) SAMC 5

ACRONYMS AND ABBREVIATIONS

AMC	Activated Metal Canister
BWR	Boiling Water Reactor
DOE	U.S. Department of Energy
EIS	Environmental Impact Statement
GTCC	Greater-Than-Class-C
LLW	Low-Level Radioactive Waste
Pb	Lead
PWR	Pressurized Water Reactor
SAMC	Shielded Activated Metal Canister

1. INTRODUCTION

This document provides volume and weight calculations for the Activated Metal Canister (AMC) and Shielded Activated Metal Canister (SAMC), which may be used for the packaging of Greater-Than-Class-C (GTCC) low level nuclear waste (LLW) from nuclear utilities. The calculations were done in support of the environmental impact statement (EIS) to evaluate the potential environmental impacts from the construction, operation, closure and post-closure performance of a disposal facility for GTCC LLW and potentially Department of Energy (DOE) GTCC-like waste[1].

2. WASTE PACKAGES

The AMC is comprised of a hollow stainless steel cylinder with two plates, one attached to the top and the other to the bottom (Figure 1a). The SAMC is an AMC with an additional hollow lead (Pb) cylinder (wall thickness of 0.133 m) inserted into it (Figure 1b). The exterior dimensions of the AMC are defined in Table 1.

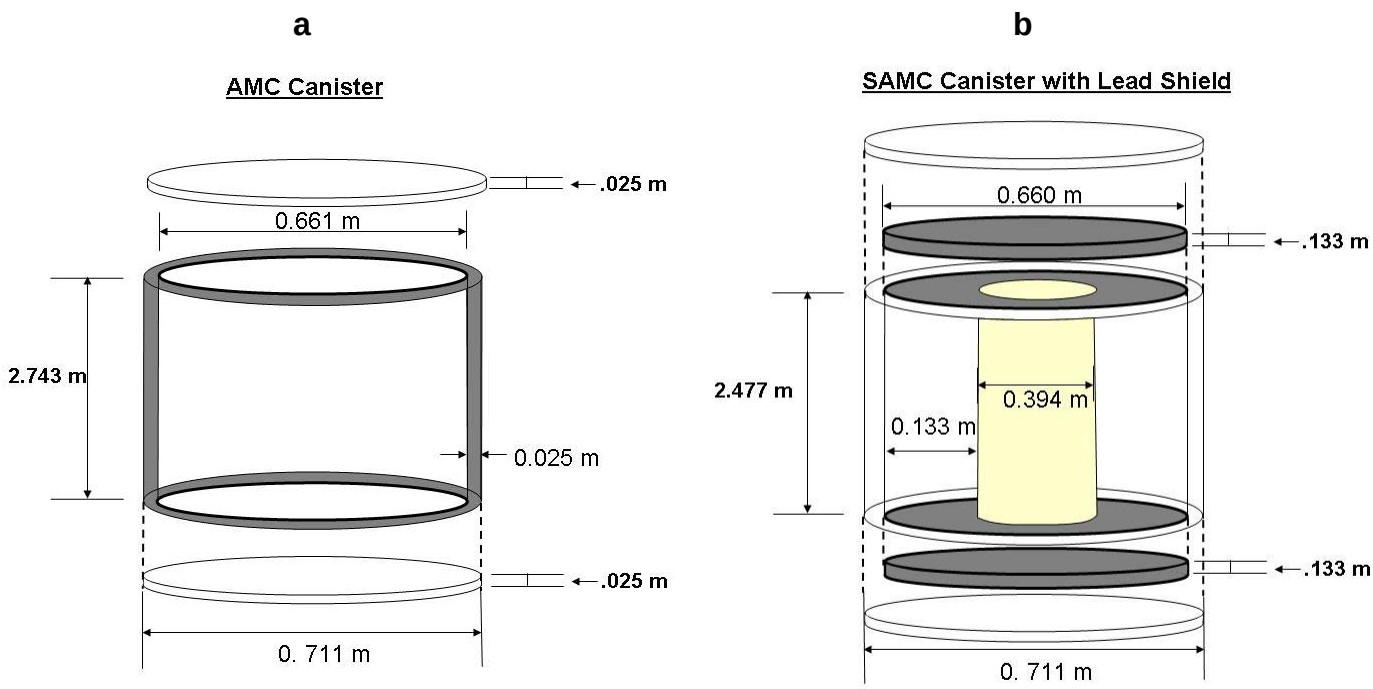

Figure 1. Schematic diagram of a.) AMC and b.) SAMC

Table 1. Exterior dimensions of the AMC

Length AMC L (m)	Outside Diameter D (m)	Wall Thickness WT (m)
2.794	0.711	0.0254

[1] DOE GTCC-like waste include DOE-owned waste having characteristics similar to GTCC LLW for which there is currently no disposal path.

3. CALCULATED VOLUMES

The internal volume of the AMC is 0.940 m^3 and the SAMC internal volume is 0.301 m^3. Appendix A shows the internal volumes for the two canisters were calculated.

4. CALCULATED WEIGHTS

The individual weights of an empty AMC and SAMC are 1.51 and 9.47 tons, respectively. Shipment and or disposal of the canisters may occur in the form of a three-, four-, five-, or seven-packs, the weights of the various disposal/shipping configurations for the empty canisters are listed in Table 2. Appendix B shows how the weights of the two canisters were calculated.

Table 2. Empty canister weights (in tons)

Type	1-Pack	3-Pack	4-Pack	5-Pack	7-Pack
AMC	1.51	4.52	6.03	7.53	10.55
SAMC	9.47	28.40	37.87	47.34	66.27

The individual weights of a full[2] AMC and SAMC are 7.74 and 11.47 tons, respectively. When full, the H-SAMC has a weight of 5.38 tons. The weights of the possible disposal/shipping configurations for the full canisters are listed in Table 3. Appendix C shows the calculations.

Table 3. Full canister weights (in tons)

Type	1-Pack	3-Pack	4-Pack	5-Pack	7-Pack
AMC	7.74	23.23	30.97	38.71	54.20
SAMC	11.47	34.40	45.87	57.34	80.28

[2] Packaged weights were calculated assuming a 75% packaging efficiency (25% empty volume) and LLW material density equivalent to stainless steel (8044 kg/m^3). The assumption is based on appendices E of NUREG/CR-6174 (NRC 1996) and NUREG/CR-5884 (NRC 1995), which provide details of the analyses used to estimate packaged disposal volumes for a boiling water reactor (BWR) and a pressurized water reactor (PWR), respectively. The appendices describe the dimensions of individual components, an approach to cutting up large parts and packaging them into rectangular canisters, and the size of the packaging canisters. For the BWR, the canister dimensions were 9”x9”x178”, resulting in an internal volume of 0.24 m^3. The GTCC component volume of 5.364 m^3 was packaged into 29 canisters, implying a 78% packaging efficiency (22% empty volume) or a packaging factor of 1.28. Similarly, for the PWR, the canister dimensions were 9”x9”x180” (0.24m^3), and the GTCC LLW component volume of 8.415m^3 was packaged into 46 canisters, implying a 76% packaging efficiency (24% empty volume) or a packaging factor of 1.31.

5. REFERENCES

NRC (1995). NUREG/CR-5884; PNL-8742, Volume 2. Revised Analysis of Decommissioning for the Reference Pressurized Water Reactor Power Station. Nuclear Regulatory Commission. Washington, D.C.

NRC (1996). NUREG/CR-6174; PNL-9975. Revised Analysis of Decommissioning for the Reference Boiling Water Reactor Power Station. Nuclear Regulatory Commission. Washington, D.C.

Appendix A – Volume Calculations

In order to determine the weight of the AMC and SAMC shell and internal volumes needed to be calculated for both types.

A.1 Shell Volume

The following equations show how the shell volume for the canisters and shields were derived.

(A.1.) $$V_{pc} = \pi\left(\frac{D}{2}\right)^2 \times WT$$

(A.2) $$V_{wc} = \left[\pi\left(\frac{D}{2}\right)^2 \times \left(L - 2WT\right)\right] - \left[\pi\left(\frac{\left[D - 2WT\right]}{2}\right)^2 \times \left(L - 2WT\right)\right]$$

(A.3) $$V_{ps} = \pi\left(\frac{\left[D - 2WT\right]}{2}\right)^2 \times ST$$

(A.4) $$V = \left[\pi\left(\frac{\left[D - 2WT\right]}{2}\right)^2 \times \left(L - 2WT - 2ST\right)\right] - \left[\pi\left(\frac{\left[D - 2WT - 2ST\right]}{2}\right)^2 - \left(L - 2WT - 2ST\right)\right]$$

(A.5) $$V_{tc} = V_{wc} + \left(2V_{pc}\right)$$

(A.6) $$V_{ts} = V_{ws} + \left(2V_{ps}\right)$$

Where,

L = exterior length of the AMC and SAMC (2.794 m)
D = outside diameter of the AMC and SAMC (0.711 m)
WT = wall thickness of the AMC (0.025 m)
ST = shield insert thickness for the SAMC (0.133 m)
V_{pc} = volume of AMC top/bottom plate
V_{wc} = volume of AMC wall
V_{ps} = volume of SAMC shield top/bottom plate
V_{ws} = volume of SAMC shield wall
V_{tc} = total volume of AMC shell
V_{ts} = total volume of SAMC shield shell

Table A.1. Shell volumes for the both of the GTCC LLW canisters (where x = c or s)

Shell Volume (m^3)			
Type (x)	**Top/Bottom Plate (V_{px})**	**Cylinder Wall (V_{wx})**	**Total Shell (V_{tx})**
AMC (c)	0.010	0.150	0.170
SAMC (s)	0.046	0.547	0.638

A.2. Internal Volumes

The following equations show how the internal volume for the AMC and SAMC were calculated.

(A.7) $$V_{ic} = \pi \left(\frac{\left[D - 2WT \right]}{2} \right)^2 \times \left(L - 2WT \right)$$

(A.8) $$V_{is} = \pi \left(\frac{\left[D - 2WT - 2ST \right]}{2} \right)^2 \times \left(L - 2WT - 2ST \right)$$

Where,

V_{ic} = internal volume of AMC
V_{is} = internal volume of SAMC

Table A.2. Internal Volumes for both types of the GTCC LLW canisters (where x = c or s)

Internal Volume	
Type (x)	**V_{ix} (m^3)**
AMC (c)	0.940
SAMC (s)	0.301

Appendix B – Weight Calculations for Empty Canisters

The following equations show how to calculate the weights for the AMC and SAMC, when empty.

(B.1) $W_c = V_{tc} \times \rho_{ss}$

(B.2) $W_s = \left(V_{ts} \times \rho_{pb}\right) + W_c$

Where,

W_c = weight of AMC
W_s = weight of SAMC
ρ_{ss} = density of stainless steel (8044 kg/m^3)
ρ_{pb} = density of lead (11340 km/m^3)

Table B.1. Empty Weight for both of the GTCC LLW canisters (where x = c or s)

Empty Weight	
Type (x)	**W_x (ton)**
AMC (c)	1.51
Shield	7.96
SAMC (s)	9.47

<u>Conversion</u>
1 kg = 0.0011 ton

Appendix C – Weight Calculations for Full Canisters

The following equations show how to calculate the weight for a full AMC and SAMC (based on assumptions outlined in Section 4).

(C.1) $$W_{fc} = W_c + \left(V_{ic} \times 0.75 \rho_{ss}\right)$$

(C.2) $$W_{fs} = W_c + W_s + \left(V_{is} \times 0.75 \rho_{ss}\right)$$

Where,

W_{fc} = weight of full AMC
W_{fs} = weight of full SAMC

Table C.1. Full Weight for both of the GTCC LLW canisters (where x = c or s)

Full Weight	
Type (x)	**W_{fx} (ton)**
AMC (c)	7.74
SAMC (s)	11.47

<u>Conversion</u>
1 kg = 0.0011 ton

APPENDIX E

Supporting Estimates for the Number of TADs for the Greater-Than-Class-C Low-Level Radioactive Waste Environmental Impact Statement Evaluations
(Unreviewed not finalized)

Supporting Estimates for the Number of TADs for the Greater-Than-Class-C Low-Level Radioactive Waste Environmental Impact Statement Evaluations

Author: Christi Leigh _____
Print Signature Date

Technical Review: Joe Schelling _____
Print Signature Date

Management Review: Mark Rigali _____
Print Signature Date

CONTENTS

1. INTRODUCTION 5

2. GTCC LLW FROM NUCLEAR UTILITIES 5

3. SEALED SOURCES 8

4. DOE ACTIVATED METAL 9

5. PROCESS WASTE 12

6. TOTALS 14

7. REFERENCES 14

APPENDIX A: ESTIMATED GTCC LLW TAD AND CASK NUMBERS FOR GTCC LLW FROM US REACTORS
APPENDIX B: ESTIMATED TAD CONTAINER ACTIVITIES FOR GTCC LLW FROM US REACTORS
APPENDIX C: ESTIMATED GTCC LLW TAD AND CASK NUMBERS FOR PROCESS WASTE
APPENDIX D: ESTIMATED TAD CONTAINER ACTIVITIES FOR PROCESS WASTE

FIGURES

Figure 1. Schematic diagram of AMC....7

Figure 2. Configuration of AMCs in TAD....7

Figure 3. Configuration of ^{137}Cs Irradiators in a TAD....8

TABLES

Table 1. Average TAD Radionuclide Activities for GTCC LLW from Nuclear Utilities....7

Table 2. Number of TADs and Average TAD Activities for the GTCC LLW and DOE GTCC-like Sealed Source Inventory....9

Table 3. Number of TADs for the DOE Activated Metal Inventory....10

Table 4. Average TAD Radionuclide Activities for DOE Activated Metals....11

Table 5. Number of TADs for the Process Waste Inventory[a]....12

Table 6. Average TAD Radionuclide Activities for Process Waste....12

Table 7. Number of TADs for the GTCC LLW and DOE GTCC-like Sealed Source Inventory....14

TABLE A-1. ESTIMATED GTCC LLW CANISTER NUMBERS FOR US REACTORS

TABLE B-1. ESTIMATED CONTAINER ACTIVITIES FOR GTCC LLW FROM US REACTORS

TABLE C-1: ESTIMATED CONTAINER NUMBER FOR PROCESS WASTE

TABLE D-1. ESTIMATED ACTIVITIES FOR PROCESS WASTE

TABLE D-1. ESTIMATED GTCC LLW CANISTER NUMBERS FOR US REACTORS

TABLE D-2. ESTIMATED TAD CONTAINER ACTIVITIES FOR PROCESS WASTE

ACRONYMS AND ABBREVIATIONS

AMC	Activated Metal Canister
BWR	Boiling Water Reactor
Ci	Curies
DOE	U.S. Department of Energy
EIS	Environmental Impact Statement
FR	Federal Register
GTCC	Greater-Than-Class-C
LLW	Low-Level Radioactive Waste
NAC-STC	NAC International Storage Transportation Container
NRC	U.S. Nuclear Regulatory Commission
PWR	Pressurized Water Reactor
SNL	Sandia National Laboratories
TAD	Transportation, Aging and Disposal cask
TN	Transnuclear
WIPP	Waste Isolation Pilot Plant
YM	Yucca Mountain

Cm	Curium
C	Carbon
Am	Americium
Co	Cobalt
Cs	Cesium
Fe	Iron
Mn	Manganese
Mo	Molybdenum
Nb	Niobium
Np	Neptunium
Ni	Nickel
Pu	Plutonium
Sr	Strontium
Tc	Technetium
Th	Thorium
U	Uranium

1. INTRODUCTION

The Low-Level Radioactive Waste Policy Amendments Act of 1985 (LLRWPAA) assigned the United States Federal Government the responsibility for disposing of Greater-Than-Class-C (GTCC) low-level radioactive waste (LLW) generated by activities licensed by U.S. Nuclear Regulatory Commission (NRC) or Agreement States (42 USC 2021 as amended). The LLRWPAA requires that the Federal Government provide for the disposal of GTCC LLW in a facility that adequately protects the safety and health of the public and is licensed by NRC. As part of the responsibilities assigned to the U.S. Department of Energy (DOE) in the LLRWPAA, the DOE has begun the environmental impact statement (EIS) process for development of a disposal capability for GTCC LLW and DOE GTCC-like waste[1].

The sites under consideration for the GTCC LLW EIS are the Waste Isolation Pilot Plant (WIPP), the Yucca Mountain (YM) repository, other DOE sites with a waste disposal mission, and generic commercial sites. The proposed YM repository is the focus of this report.

This report calculates the number of Transportation, Aging and Disposal (TAD) Canisters that would be expected for GTCC LLW based on the inventory that was prepared in support of the GTCC LLW EIS and summarized in *Greater-Than-Class C Low-Level Radioactive Waste And DOE Greater-Than-Class C-Like Waste Inventory Estimates* (DOE 2007). While a final design for the TADs has not been selected, the preliminary designs submitted by Energy Solutions (Energy Solutions 2007), Transnuclear, Inc. (TN 2007), and NAC International, Inc. (NAC 2007) are similar with an outside diameter for the TAD of 66 inches (1.68 m) and a length of 212 inches (5.38 m). In addition, TADs procurement information indicates that a transportation cask will be provided for the TADs that will allow one TAD per cask per railcar for shipment to the YM repository (NAC 2007)

There are four categories of GTCC LLW and DOE GTCC-like waste described in DOE (2007):

- Nuclear utility GTCC LLW,
- Sealed sources including intact irradiators containing ^{137}Cs sealed sources,
- DOE activated metals, and
- Process waste.

Estimates of the number of TADs for each of these categories are given below.

2. GTCC LLW FROM NUCLEAR UTILITIES

The total packaged volume of GTCC LLW from U.S. nuclear reactors was estimated in Schelling, Leigh, and Trone (2007). If it is assumed that all of the GTCC LLW from nuclear utilities is packaged in canisters with outer dimensions of 28 inches diameter (0.71 m) and 110 inches long (2.79 m), the assumed basic inner dimensions are 26 inches diameter (0.66 m) and 108 inches long (2.74 m), and the available internal volume of this canister would be 33.19 ft^3 (0.94 m^3). These

[1] DOE GTCC-like waste includes DOE-owned waste having characteristics similar to GTCC LLW for which there is currently no disposal path.

canisters are called Activated Metal Canisters (AMCs) in the remainder of this report. Figure 1 is a depiction of the AMC. Calculation of the number of AMCs required for GTCC LLW from U.S. reactors was performed in Schelling, Leigh and Trone (2007) and is summarized in Appendix A.

Based on the expected TAD dimensions, three AMCS can fit in a TAD as shown in Figure 2. Calculation of the resulting number of TADs is shown in Appendix A. In total, 365 TADs with GTCC LLW from the nuclear utilities are expected. Since there is a one to one correlation between the number of TADs and the number of rail casks, 365 rail casks with GTCC LLW from the nuclear utilities are expected.

Calculation[2] of the radionuclide activities per TAD is shown in Appendix B. Average values are given in Table 1. The radionuclide activities shown in Table 1 and in Appendix B are the activities at the time that the waste becomes available for disposal. This is defined as the time of closure plus a six-year cooling period for reactors still operating in the U.S. as of 2005. Time of availability is defined as 2019 for reactors that were shut down as of 2005. The significant radionuclides for this analysis are ^{14}C, ^{54}Mn, ^{55}Fe, ^{59}Ni, ^{60}Co, ^{63}Ni, ^{93}Mo, and ^{94}Nb. ^{60}Co and ^{55}Fe dominate the inventory and the dose initially, but with 5.27 year and 2.7 year half-lives respectively, they diminish rapidly and are not as big of a dose concern at later times. The other radionuclides listed have much longer half-lives and are present in sufficient concentration to provide long-term dose considerations.

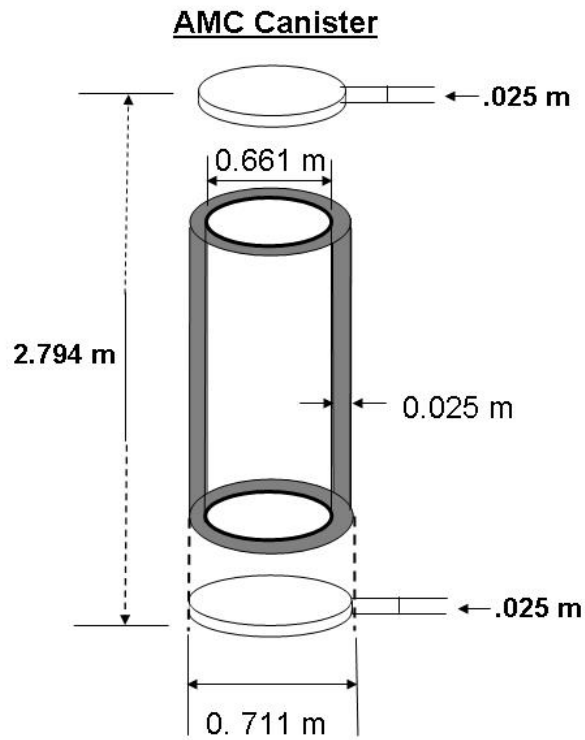

Figure 1. Schematic diagram of AMC

[2] DOE 2007 contains an error that resulted in slightly lower total volumes and activities than those used in this calculation (870 m^3 [30,719 ft^3] in DOE 2007; the correct number is 881 m^3 [31,108 ft^3]). In addition, DOE 2007 reflects decay for shutdown reactors to 2007 while this report reflects decay for shutdown reactors to 2019.

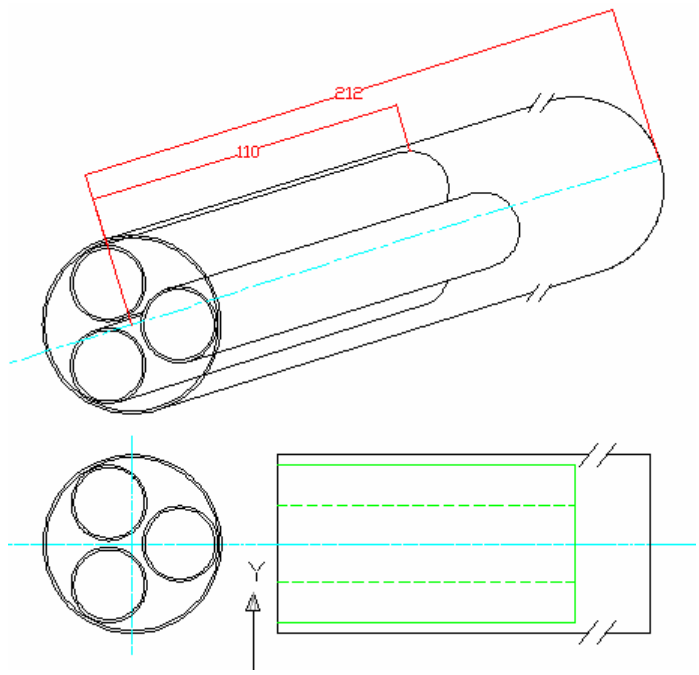

Figure 2. Configuration of AMCs in TAD (dimensions in figure given in inches)

Table 1. Average TAD Radionuclide Activities for GTCC LLW from Nuclear Utilities[a]

Category	C-14	Mn-54	Fe-55	Ni-59	Co-60	Ni-63	Mo-93	Nb-94
Activity Time of Availability (Ci)								
Projected BWRs	7.34E+03	4.59E+03	1.41E+07	4.45E+04	1.07E+07	5.87E+06	2.28E+01	1.05E+02
Projected PWRs	1.40E+04	4.41E+04	2.63E+07	7.46E+04	3.94E+07	1.08E+07	8.05E+01	4.48E+02
Subtotal Projected	2.14E+04	4.87E+04	4.03E+07	1.19E+05	5.01E+07	1.67E+07	1.03E+02	5.53E+02
Stored BWRs	2.57E+02	5.03E-04	6.81E+03	1.56E+03	3.41E+04	1.77E+05	7.95E-01	3.68E+00
Stored PWRs	1.14E+03	8.55E-03	2.88E+04	6.10E+03	3.20E+05	7.80E+05	6.55E+00	3.66E+01
Subtotal Stored	1.40E+03	9.05E-03	3.56E+04	7.66E+03	3.54E+05	9.56E+05	7.35E+00	4.03E+01
Total at Availability	2.28E+04	4.87E+04	4.04E+07	1.27E+05	5.05E+07	1.77E+07	1.11E+02	5.94E+02
Category	**C-14**	**Mn-54**	**Fe-55**	**Ni-59**	**Co-60**	**Ni-63**	**Mo-93**	**Nb-94**
Average TAD Container Activity (Ci)								
Projected BWRs (90 TADs)	8.15E+01	5.10E+01	1.56E+05	4.94E+02	1.19E+05	6.52E+04	2.53E-01	1.17E+00
Projected PWRs (244 TADs)	5.74E+01	1.81E+02	1.08E+05	3.06E+02	1.62E+05	4.45E+04	3.30E-01	1.84E+00
Subtotal Projected (334 TADs)	6.39E+01	1.46E+02	1.21E+05	3.57E+02	1.50E+05	5.01E+04	3.09E-01	1.66E+00
Stored BWRs (8 TADs)	3.21E+01	6.29E-05	8.51E+02	1.95E+02	4.26E+03	2.21E+04	9.94E-02	4.60E-01
Stored PWRs (23 TADs)	4.97E+01	3.72E-04	1.25E+03	2.65E+02	1.39E+04	3.39E+04	2.85E-01	1.59E+00
Subtotal Stored (31 TADs)	4.51E+01	2.92E-04	1.15E+03	2.47E+02	1.14E+04	3.08E+04	2.37E-01	1.30E+00
Total at Shutdown (365 TADs)	6.23E+01	1.33E+02	1.11E+05	3.47E+02	1.38E+05	4.84E+04	3.03E-01	1.63E+00

[a]Based on values given in Appendix A. The average is calculated as the total activity in each category (i.e., "Projected BWRS") divided by the total number of TADs for that category.

3. SEALED SOURCES

The total packaged volume of sealed sources was estimated in DOE (2007). DOE (2007) indicates that all sealed sources other than the ^{137}Cs irradiators would be packaged in 55-gallon (208 liters) carbon steel drums. The carbon steel drums would be filled in accordance with packaging limits provided by the DOE's Off-Site Source Recovery Project (OSRP). Carbon steel drums have external dimensions of 35 inches (0.89 m) in length and 24 inches (0.61 m) in diameter. For the YM disposal option, it is assumed that three carbon steel drums would be placed in an AMC, and three AMCs are placed in a TADs. The ^{137}Cs irradiators are rectangular with dimensions of 59.1 inches (1.50 m) by 26.4 inches (0.67 m). Six ^{137}Cs irradiators can fit in a TAD as shown in Figure 3. Table 2 gives the number of TADs and radionuclide activity per TAD for sealed sources and ^{137}Cs irradiators. In total, 538 TADs with sealed sources are expected. Since there is a one to one correlation between the number of TADs and the number of rail casks, 538 rail casks with sealed sources are expected.

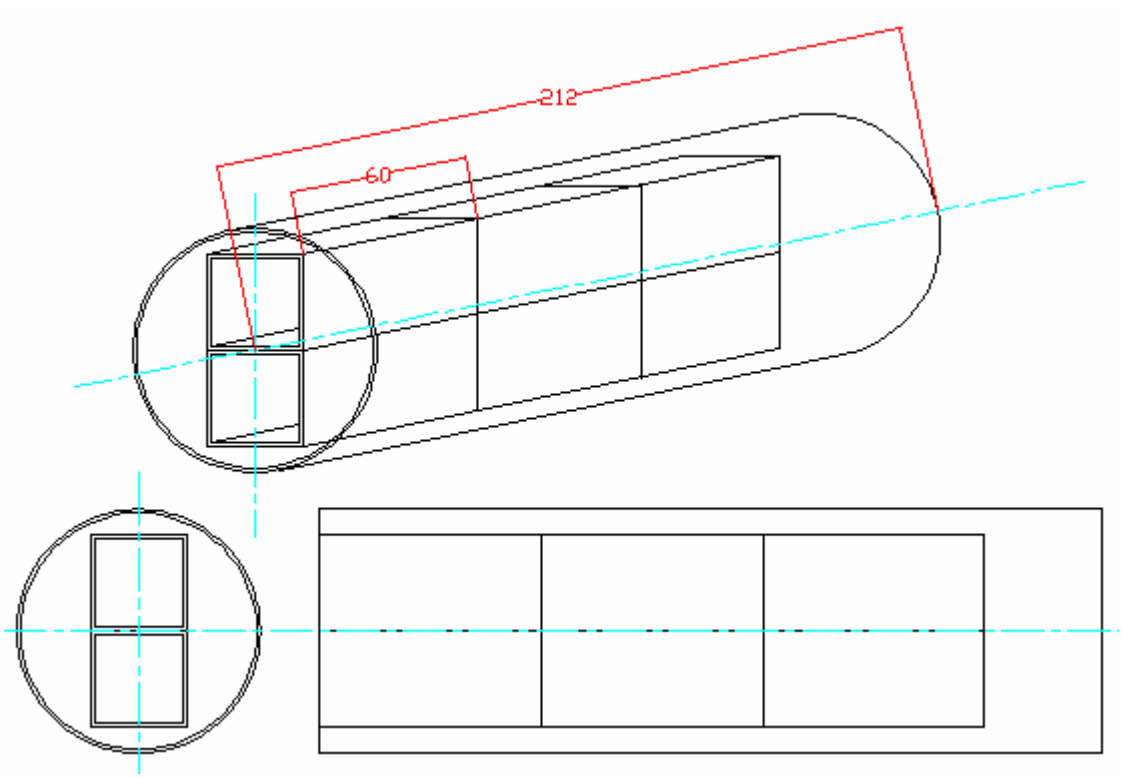

Figure 3. Configuration of ^{137}Cs Irradiators in a TAD (dimensions in figure given in inches)

Table 2. Number of TADs and Average TAD Activities for the GTCC LLW and DOE GTCC-like Sealed Source Inventory

Type	Radionuclide	No. of 55-gallon Drums	No. TADs	Activity (Ci)	Activity per TAD
Commercial	Am-241	1,593	177	5.53E+04	3.12E+02
Commercial	Cm-244	1	1	2.20E+01	2.20E+01
Commercial	Pu-238	1,269	141	4.38E+04	3.11E+02
Commercial	Pu-239	270	30	3.04E+03	1.01E+02
DOE	Cm-244	2	1	5.82E+01	5.82E+01
DOE	Am-243	1	1	3.52E-01	3.52E-01
DOE	Pu-240	1	1	2.21E+01	2.21E+01
	Subtotal	**3,137**	**352**	**1.02E+05**	**2.90E+02**
	Radionuclide	**No. of Sources**	**No. TADs**	**Activity (Ci)**	**Activity per TAD**
Commercial	Cs-137	1,435	240	2.34E+06	9.75E+03
DOE	Cs-137	46	8	4.32E+04	7.20E+03
	Subtotal	**1481**	**248**	**2.38E+06**	**1.70E+04**
	Total	**4,618**	**600**	**2.49E+06**	**1.78E+04**

4. DOE ACTIVATED METAL

The total packaged volume of DOE activated metals was estimated in DOE (2007). Like the GTCC LLW from nuclear utilities, it is assumed that all DOE activated metal is packaged in AMCs with outer dimensions of 28 inches diameter (0.71 m) and 110 inches long (2.79 m), the assumed basic inner dimensions are 26 inches diameter (0.66 m) and 108 inches long (2.74 m), and the available internal volume of this canister would be 33.19 ft^3 (0.94 m^3).

Based on the expected TAD dimensions, three AMCs can fit in a TAD. Calculation of the resulting number of TADs is shown in Table 3. In total, 21 TADs with DOE activated metal are expected. Since there is a one to one correlation between the number of TADs and the number of rail casks, 21 rail casks with DOE activated metal are expected.

Calculation of the per TAD radionuclide activities is shown in Table 4. The radionuclide activities shown in Table 4 are the activities at the time that the waste becomes available for disposal. This is defined as 2019 for stored waste and at the time of generation for projected waste.

Table 3. Number of TADs for the DOE Activated Metal Inventory

Identification	Location	Volume				Number		
		Stored Unpackaged (m^3)[b]	Projected Unpackaged (m^3)	Stored Packaged[a] (m^3)	Projected Packaged[a] (m^3)	AMCs	TADs	Casks
4468N-ATR	INL	0.251		0.33		1	1	1
ATR-BE	INL	2.5		3.33		4	2	2
NPD	ORNL	1.6		2.13		3	1	1
HFIR	ORNL	0.6		0.80		1	1	1
4468N-ATR	INL		0.4587		0.61	1	1	1
ATR-BE	INL		4.896		6.53	7	3	3
RSWF-RTP-CDR-001	INL		2.085		2.78	3	1	1
RSWF-RTP-CDR-002	INL		19.82		26.43	29	10	10
RSWF-RTP-CDR-004	INL		1.92		2.56	3	1	1
	Total	**4.95**	**29.18**	**6.60**	**38.91**	**52**	**21**	**21**

[a]Packaged volumes were calculated assuming a packaging factor of 1.33. The assumption is based on appendices E of NUREG/CR-6174 (NRC 1996b) and NUREG/CR-5884 (NRC 1995b), which provide details of the analyses used to estimate packaged disposal volumes for a boiling water reactor (BWR) and a pressurized water reactor (PWR), respectively. The appendices describe the dimensions of individual components, an approach to cutting up large parts and packaging them into rectangular canisters, and the size of the packaging canisters. For the BWR, the canister dimensions were 9”x9”x178”, resulting in an internal volume of 0.24 m^3 (8.47 ft^3). The GTCC component volume of 5.364 m^3 (189.40 ft^3) was packaged into 29 canisters, implying a 78% packaging efficiency (22% empty volume) or a packaging factor of 1.28. Similarly, for the PWR, the canister dimensions were 9”x9”x180” (0.24 m^3 or 8.47 ft^3), and the GTCC LLW component volume of 8.415 m^3 (297.13 ft^3) was packaged into 46 canisters, implying a 76% packaging efficiency (24% empty volume) or a packaging factor of 1.31; [b]Sites reported values in m^3. There are 35.31 ft^3 in 1 m^3.

Table 4. Average TAD Radionuclide Activities for DOE Activated Metals

Description	Location	Average TAD Container Activity (Ci/container)								
		C-14	Fe-55	Mn-54	Ni-59	Co-60	Ni-63	Mo-93	Nb-94	Tc-99
4468N-ATR	INL	1.74E+01	2.47E+02	8.81E-05	2.95E+02	7.45E+03	3.55E+04	1.05E-01	7.75E+00	4.01E-03
ATR-BE	INL	2.73E+01	0.00E+00	0.00E+00	3.02E-01	5.88E+01	5.50E+01	0.00E+00	8.84E-04	4.96E-03
NPD	ORNL	1.41E+02	1.05E+02	5.43E-06	0.00E+00	4.62E+02	6.11E+01	0.00E+00	0.00E+00	0.00E+00
HFIR	ORNL	0.00E+00	2.00E-01	0.00E+00	0.00E+00	7.74E+01	1.81E+01	0.00E+00	0.00E+00	0.00E+00
4468N-ATR	INL	3.18E+01	1.58E+04	1.36E+01	5.39E+02	8.58E+04	7.14E+04	1.93E-01	1.42E+01	7.33E-03
ATR-BE	INL	1.62E+02	0.00E+00	0.00E+00	8.34E-01	1.27E+03	2.02E+02	0.00E+00	3.77E-03	1.79E-02
RSWF-RTP-CDR-001	INL	0.00E+00	0.00E+00	0.00E+00	0.00E+00	6.01E+04	0.00E+00	0.00E+00	2.40E+00	5.57E+02
RSWF-RTP-CDR-002	INL	0.00E+00	0.00E+00	0.00E+00	0.00E+00	5.72E+04	0.00E+00	0.00E+00	2.28E+00	5.29E+02
RSWF-RTP-CDR-004	INL	0.00E+00	0.00E+00	0.00E+00	0.00E+00	1.68E+03	0.00E+00	0.00E+00	1.16E+01	5.55E+01
Total Average		3.49E+01	7.68E+02	6.49E-01	3.99E+01	3.48E+04	5.13E+03	1.42E-02	2.80E+00	2.81E+02

5. PROCESS WASTE

The total packaged volumes of process waste were estimated in DOE (2007). DOE (2007) indicates that all process waste going to the YM repository would be packaged in 55-gallon carbon steel drums and overpacked in AMCs. Carbon steel drums have external dimensions of 35 in (0.9 m) in length and 24 in (0.61 m) in diameter. Three carbon steel drums would be placed in an AMC, and three AMCs are placed in a TAD. Table 5 gives the number of TADs for process waste. In total, 1,285 TADs with process waste are expected. Since there is a one to one correlation between the number of TADs and the number of rail casks, 1,285 rail casks with process waste are expected.

Table 5. Number of TADs for the Process Waste Inventory[a]

	No. of 55-gallon Drums	No. AMCs	No. TADs	No. Casks
CH Stored	2,039	684	232	232
RH Stored	2,626	879	297	297
CH Projected	4,749	1584	529	529
RH Projected	2,026	677	227	227
Total	11,440	3,824	1,285	1,285

[a]Based on the calculations shown in Appendix C.

Table 6 shows the activity per container for the TADs containing process waste.

Table 6. Average TAD Radionuclide Activities for Process Waste

Category	C-14	Mn-54	Fe-55	Co-60	Ni-59	Ni-63	Sr-90	Mo-93	Nb-94
Activity Time of Availability (Ci)									
CH Stored	4.07E+03	0.00E+00	1.87E+02	3.69E+00	2.72E-04	3.53E-02	3.02E+03	0.00E+00	0.00E+00
RH Stored	1.97E+05	0.00E+00	2.69E+02	1.04E+04	8.04E+03	4.12E+05	2.25E+05	0.00E+00	0.00E+00
CH Projected	1.47E+03	2.35E+00	2.35E+03	8.31E+00	2.72E-07	1.33E-05	1.35E+05	0.00E+00	0.00E+00
RH Projected	8.12E+00	2.92E-04	2.75E+02	2.39E+02	2.88E+01	2.36E+03	2.28E+04	7.77E-03	2.74E-02
Total	2.02E+05	2.35E+00	3.08E+03	1.07E+04	8.07E+03	4.15E+05	3.85E+05	7.77E-03	2.74E-02
Category	**C-14**	**Mn-54**	**Fe-55**	**Co-60**	**Ni-59**	**Ni-63**	**Sr-90**	**Mo-93**	**Nb-94**
Average TAD Container Activity (Ci/container)									
CH Stored	1.75E+01	0.00E+00	8.04E-01	1.59E-02	1.17E-06	1.52E-04	1.30E+01	0.00E+00	0.00E+00
RH Stored	6.62E+02	0.00E+00	9.07E-01	3.51E+01	2.71E+01	1.39E+03	7.57E+02	0.00E+00	0.00E+00
CH Projected	2.77E+00	4.44E-03	4.44E+00	1.57E-02	5.15E-10	2.50E-08	2.54E+02	0.00E+00	0.00E+00
RH Projected	3.58E-02	1.29E-06	1.21E+00	1.05E+00	1.27E-01	1.04E+01	1.00E+02	3.42E-05	1.21E-04
Total	1.57E+02	1.83E-03	2.40E+00	8.31E+00	6.28E+00	3.23E+02	3.00E+02	6.05E-06	2.13E-05

Table 6. Average TAD Radionuclide Activities for Process Waste (continued)

Category	Tc-99	Cs-137	Pb-210	Th-229	Th-230	U-233	U-235	Np-237	Pu-238
Activity Time of Availability (Ci)									
CH Stored	1.53E+02	1.74E+03	2.82E-05	6.78E+02	1.22E+02	4.69E+03	9.37E+00	1.54E+01	3.53E+05
RH Stored	7.09E+03	1.99E+05	4.64E-09	2.44E+01	1.70E+01	9.25E+02	1.39E+01	1.85E+02	8.67E+03
CH Projected	6.00E+01	2.38E+05	6.72E-06	2.44E+02	4.40E+01	1.69E+03	3.38E+00	7.17E+00	1.42E+05
RH Projected	1.32E+01	6.61E+04	1.51E-10	6.13E-03	2.23E-03	2.87E-01	2.14E-02	5.78E+00	3.01E+03
Total	7.31E+03	5.05E+05	3.49E-05	9.47E+02	1.83E+02	7.31E+03	2.66E+01	2.13E+02	5.07E+05
Category	**Tc-99**	**Cs-137**	**Pb-210**	**Th-229**	**Th-230**	**U-233**	**U-235**	**Np-237**	**Pu-238**
Average TAD Container Activity (Ci/container)									
CH Stored	6.59E-01	7.49E+00	1.21E-07	2.92E+00	5.27E-01	2.02E+01	4.04E-02	6.63E-02	1.52E+03
RH Stored	2.39E+01	6.71E+02	1.56E-11	8.23E-02	5.71E-02	3.11E+00	4.67E-02	6.23E-01	2.92E+01
CH Projected	1.13E-01	4.51E+02	1.27E-08	4.62E-01	8.32E-02	3.19E+00	6.38E-03	1.36E-02	2.69E+02
RH Projected	5.81E-02	2.91E+02	6.66E-13	2.70E-05	9.82E-06	1.26E-03	9.45E-05	2.55E-02	1.33E+01
Total	5.69E+00	3.93E+02	2.71E-08	7.37E-01	1.43E-01	5.68E+00	2.07E-02	1.66E-01	3.94E+02

Table 6. Average TAD Radionuclide Activities for Process Waste (continued)

Category	Pu-239	Pu-240	Pu-241	Am-241	Pu-242	Am-243	Cm-244
Activity Time of Availability (Ci)							
CH Stored	2.72E+05	2.17E+05	3.26E+06	9.57E+05	1.36E+03	1.04E+04	4.21E+02
RH Stored	6.83E+04	5.15E+04	1.62E+05	2.93E+05	2.14E+02	2.35E+05	2.66E+04
CH Projected	9.80E+04	7.83E+04	2.30E+06	3.53E+05	4.89E+02	3.76E+03	5.29E+02
RH Projected	1.29E+02	9.70E+01	7.59E+02	1.57E+02	3.19E-01	7.11E+00	1.50E+00
Total	4.38E+05	3.47E+05	5.72E+06	1.60E+06	2.06E+03	2.49E+05	2.75E+04
Category	**Pu-239**	**Pu-240**	**Pu-241**	**Am-241**	**Pu-242**	**Am-243**	**Cm-244**
Average TAD Container Activity (Ci/container)							
CH Stored	1.17E+03	9.36E+02	1.40E+04	4.12E+03	5.86E+00	4.50E+01	1.82E+00
RH Stored	2.30E+02	1.74E+02	5.46E+02	9.86E+02	7.19E-01	7.91E+02	8.94E+01
CH Projected	1.85E+02	1.48E+02	4.35E+03	6.68E+02	9.24E-01	7.12E+00	1.00E+00
RH Projected	5.69E-01	4.27E-01	3.34E+00	6.94E-01	1.41E-03	3.13E-02	6.61E-03
Total	3.41E+02	2.70E+02	4.45E+03	1.25E+03	1.60E+00	1.94E+02	2.14E+01

6. TOTALS

Table 7. Number of TADs for the GTCC LLW and DOE GTCC-like Waste Inventory

	No. TADs	No. Casks
GTCC LLW from nuclear utilities	365	365
Sealed Sources	600	600
DOE Activated Metal	21	21
Process Waste	1,285	1,285
Total	**2,271**	**2,271**

7. REFERENCES

Energy Solutions. 2007. *Proof-of-Concept Design Summary for the Transportation, Aging, and Disposal Canister System.* DOE-04.0101, Revision 0, March 1, 2007. ERMS#

NAC International, Inc. (NAC). 2007. *Transport, Aging, and Disposal Canister System Proof of Concept Design Summary Report.* February 28, 2007. ERMS#

NRC (1995). NUREG/CR-5884; PNL-8742, Volume 2. *Revised Analysis of Decommissioning for the Reference Pressurized Water Reactor Power Station*. Nuclear Regulatory Commission. Washington, D.C.

NRC (1996). NUREG/CR-6174; PNL-9975. Revised Analysis of Decommissioning for the Reference Boiling Water Reactor Power Station. Nuclear Regulatory Commission. Washington, D.C.

U.S. Department of Energy (DOE). 2007. *Greater-Than-Class C Low-Level Radioactive Waste And DOE Greater-Than-Class C-Like Waste Inventory Estimates.* Sandia National Laboratories. Carlsbad, NM. ERMS#

Schelling, J., C. D. Leigh, and Trone, J. (2007). *DRAFT - Supporting Nuclear Utility Inventory Estimates for the Greater-Than-Class-C Low-Level Radioactive Waste Environmental Impact Statement Evaluations.* Sandia National Laboratories. Carlsbad, NM. ERMS#

Transnuclear, Inc. (TN). 2007. *TN TAD Canister System Proof of Concept Design Report*. 30552-0101 Rev. A. Columbia MD. ERMS#

APPENDIX A
ESTIMATED GTCC LLW TAD AND CASK NUMBERS FOR US REACTORS

The values shown in Table A-1 were calculated as described in Section 2.

TABLE A-1
ESTIMATED GTCC LLW CANISTER NUMBERS FOR US REACTORS[a]

Reactor	Reactor Number	Capacity MW(e)	State	NRC Region	Reactor Type	Volume (m^3)	Number AMCs (@0.94m^3)	Number TADs (3 AMCs per TAD)	Number Transportation Casks (1 TAD per cask)
Browns Ferry-1	BWR1	1,065	AL	2	BWR	6.42E+00	7	3	3
Browns Ferry-2	BWR2	1,118	AL	2	BWR	6.74E+00	8	3	3
Browns Ferry-3	BWR3	1,114	AL	2	BWR	6.71E+00	8	3	3
Fermi-2	BWR4	1,111	OH	3	BWR	6.69E+00	8	3	3
Hope Creek-1	BWR5	1,049	DE	1	BWR	6.32E+00	7	3	3
Peach Bottom-2	BWR6	1,112	PA	1	BWR	6.70E+00	8	3	3
Peach Bottom-3	BWR7	1,112	PA	1	BWR	6.70E+00	8	3	3
Susquehanna-1	BWR8	1,135	PA	1	BWR	6.84E+00	8	3	3
Susquehanna-2	BWR9	1,140	PA	1	BWR	6.87E+00	8	3	3
Limerick-1	BWR10	1,134	PA	1	BWR	6.83E+00	8	3	3
Limerick-2	BWR11	1,134	PA	1	BWR	6.83E+00	8	3	3
LaSalle County-1	BWR12	1,118	IL	3	BWR	6.74E+00	8	3	3
LaSalle County-2	BWR13	1,120	IL	3	BWR	6.75E+00	8	3	3
Nine Mile Point-2	BWR14	1,135	NY	1	BWR	6.84E+00	8	3	3
Columbia Generating Sta.	BWR15	1,122	WA	4	BWR	6.76E+00	8	3	3
Clinton	BWR16	1,043	IL	3	BWR	6.29E+00	7	3	3
River Bend-1	BWR17	968	LA	4	BWR	5.83E+00	7	3	3
Grand Gulf-1	BWR18	1,270	MS	4	BWR	7.65E+00	9	3	3
Perry-1	BWR19	1,235	OH	3	BWR	7.44E+00	8	3	3
Oyster Creek-1	BWR20	619	NJ	1	BWR	3.73E+00	4	2	2
Nine Mile Point-1	BWR21	621	NY	1	BWR	3.74E+00	4	2	2
Dresden-2	BWR22	867	IL	3	BWR	5.22E+00	6	2	2
Dresden-3	BWR23	867	IL	3	BWR	5.22E+00	6	2	2
Quad Cities-1	BWR24	867	IL	3	BWR	5.22E+00	6	2	2

[a]Data source is Schelling, Leigh and Trone (2007)

TABLE A-1
ESTIMATED GTCC LLW CANISTER NUMBERS FOR US REACTORS[a]
(continued)

Reactor	Reactor Number	Capacity MW(e)	State	NRC Region	Reactor Type	Volume (m^3)	Number AMCs (@0.94m^3)	Number TADs (3 AMCs per TAD)	Number Transportation Casks (1 TAD per cask)
Quad Cities-2	BWR25	867	IL	3	BWR	5.22E+00	6	2	2
Pilgrim-1	BWR26	685	MA	1	BWR	4.13E+00	5	2	2
Monticello	BWR27	569	MN	3	BWR	3.43E+00	4	2	2
Edwin I. Hatch-1	BWR28	869	GA	2	BWR	5.24E+00	6	2	2
Edwin I. Hatch-2	BWR29	883	GA	2	BWR	5.32E+00	6	2	2
Duane Arnold	BWR30	563	IA	3	BWR	3.39E+00	4	2	2
Cooper	BWR31	756	NE	4	BWR	4.56E+00	5	2	2
James Fitzpatrick	BWR32	844	NY	1	BWR	5.09E+00	6	2	2
Brunswick-1	BWR33	938	NC	2	BWR	5.65E+00	7	3	3
Brunswick-2	BWR34	900	NC	2	BWR	5.42E+00	6	2	2
Vermont Yankee-1	BWR35	506	VT	1	BWR	3.05E+00	4	2	2
Projected BWR Subtotal						**2.02E+02**	**239**	**234**	**90**
Big Rock Point	SBWR1	79	MI	3	BWR	4.77E-01	1	1	1
Dresden-1	SBWR2	231	IL	3	BWR	1.39E+00	2	1	1
GE VBWR	SBWR3	17	CA	4	BWR	1.02E-01	1	1	1
Humboldt Bay-3	SBWR4	66	CA	4	BWR	3.98E-01	1	1	1
La Crosse	SBWR5	54	WI	3	BWR	3.28E-01	1	1	1
Millstone-1	SBWR6	664	CT	1	BWR	4.00E+00	5	2	2
Pathfinder	SBWR7	63	SD	4	BWR	3.78E-01	1	1	1
Stored BWR Subtotal						**7.07E+00**	**12**	**8**	**8**
Arkansas Nuclear-1	PWR1	841	AR	4	PWR	7.90E+00	9	3	3
Crystal River-3	PWR2	838	FL	2	PWR	7.87E+00	9	3	3
Davis-Besse	PWR3	873	OH	3	PWR	8.20E+00	9	3	3
Three Mile Island-1	PWR4	810	PA	1	PWR	7.61E+00	9	3	3
Oconee-1	PWR5	846	SC	2	PWR	7.95E+00	9	3	3
Oconee-2	PWR6	846	SC	2	PWR	7.95E+00	9	3	3

TABLE A-1
ESTIMATED GTCC LLW CANISTER NUMBERS FOR US REACTORS[a]
(continued)

Reactor	Reactor Number	Capacity MW(e)	State	NRC Region	Reactor Type	Volume (m^3)	Number AMCs (@0.94m^3)	Number TADs (3 AMCs per TAD)	Number Transportation Casks (1 TAD per cask)
Oconee-3	PWR7	846	SC	2	PWR	7.95E+00	9	3	3
Turkey Point- 4	PWR8	693	FL	2	PWR	6.51E+00	7	3	3
Turkey Point-3	PWR9	693	FL	2	PWR	6.51E+00	7	3	3
Prairie Island-1	PWR10	522	MN	3	PWR	4.90E+00	6	2	2
Prairie Island-2	PWR11	522	MN	3	PWR	4.90E+00	6	2	2
H.B. Robinson-2	PWR12	710	SC	2	PWR	6.67E+00	8	3	3
Point Beach-1	PWR13	512	WI	3	PWR	4.81E+00	6	2	2
Point Beach-2	PWR14	518	WI	3	PWR	4.87E+00	6	2	2
Kewaunee	PWR15	560	WI	3	PWR	5.26E+00	6	2	2
Joseph M. Farley-1	PWR16	851	AL	2	PWR	8.00E+00	9	3	3
Joseph M. Farley-2	PWR17	860	AL	2	PWR	8.08E+00	9	3	3
Diablo Canyon-1	PWR18	1,087	CA	4	PWR	1.02E+01	11	4	4
Diablo Canyon-2	PWR19	1,087	CA	4	PWR	1.02E+01	11	4	4
Millstone-3	PWR20	1,155	CT	1	PWR	1.09E+01	12	4	4
Vogtle-1	PWR21	1,152	GA	2	PWR	1.08E+01	12	4	4
Vogtle-2	PWR22	1,149	GA	2	PWR	1.08E+01	12	4	4
Braidwood-1	PWR23	1,178	IL	3	PWR	1.11E+01	12	4	4
Braidwood-2	PWR24	1,152	IL	3	PWR	1.08E+01	12	4	4
Byron-1	PWR25	1,164	IL	3	PWR	1.09E+01	12	4	4
Byron-2	PWR26	1,136	IL	3	PWR	1.07E+01	12	4	4
Wolf Creek-1	PWR27	1,166	KS	4	PWR	1.10E+01	12	4	4
D.C. Cook-1	PWR28	1,016	MI	3	PWR	9.55E+00	11	4	4
D.C. Cook-2	PWR29	1,077	MI	3	PWR	1.01E+01	11	4	4
Callaway	PWR30	1,137	MO	4	PWR	1.07E+01	12	4	4
Seabrook-1	PWR31	1,159	NH	1	PWR	1.09E+01	12	4	4
Salem-1	PWR32	1,174	DE	1	PWR	1.10E+01	12	4	4
Salem-2	PWR33	1,130	DE	1	PWR	1.06E+01	12	4	4
Indian Point-2	PWR34	979	NY	1	PWR	9.20E+00	10	4	4

TABLE A-1
ESTIMATED GTCC LLW CANISTER NUMBERS FOR US REACTORS[a]
(continued)

Reactor	Reactor Number	Capacity MW(e)	State	NRC Region	Reactor Type	Volume (m^3)	Number AMCs (@0.94m^3)	Number TADs (3 AMCs per TAD)	Number Transportation Casks (1 TAD per cask)
Indian Point-3	PWR35	991	NY	1	PWR	9.31E+00	10	4	4
Shearon Harris-1	PWR36	900	NC	2	PWR	8.46E+00	9	3	3
McGuire-1	PWR37	1,100	NC	2	PWR	1.03E+01	11	4	4
McGuire-2	PWR38	1,100	NC	2	PWR	1.03E+01	11	4	4
Beaver Valley-1	PWR39	821	PA	1	PWR	7.71E+00	9	3	3
Beaver Valley-2	PWR40	831	PA	1	PWR	7.81E+00	9	3	3
Catawba-1	PWR41	1,129	SC	2	PWR	1.06E+01	12	4	4
Catawba-2	PWR42	1,129	SC	2	PWR	1.06E+01	12	4	4
Summer	PWR43	966	SC	2	PWR	9.08E+00	10	4	4
Sequoyah-1	PWR44	1,150	TN	2	PWR	1.08E+01	12	4	4
Sequoyah-2	PWR45	1,127	TN	2	PWR	1.06E+01	12	4	4
Watts Bar-1	PWR46	1,121	TN	2	PWR	1.05E+01	12	4	4
Comanche Peak-1	PWR47	1,150	TX	4	PWR	1.08E+01	12	4	4
Comanche Peak-2	PWR48	1,150	TX	4	PWR	1.08E+01	12	4	4
South Texas Project-1	PWR49	1,280	TX	4	PWR	1.20E+01	13	5	5
South Texas Project-2	PWR50	1,280	TX	4	PWR	1.20E+01	13	5	5
Surry-1	PWR51	799	VA	2	PWR	7.51E+00	8	3	3
Surry-2	PWR52	799	VA	2	PWR	7.51E+00	8	3	3
North Anna-1	PWR53	925	VA	2	PWR	8.69E+00	10	4	4
North Anna-2	PWR54	917	VA	2	PWR	8.62E+00	10	4	4
Palo Verde-1	PWR55	1,243	AZ	4	PWR	1.17E+01	13	5	5
Palo Verde-2	PWR56	1,314	AZ	4	PWR	1.23E+01	14	5	5
Palo Verde-3	PWR57	1,247	AZ	4	PWR	1.17E+01	13	5	5
Arkansas Nuclear-2	PWR58	996	AR	4	PWR	9.36E+00	10	4	4
San Onofre-2	PWR59	1,070	CA	4	PWR	1.01E+01	11	4	4
San Onofre-3	PWR60	1,080	CA	4	PWR	1.01E+01	11	4	4
Millstone-2	PWR61	882	CT	1	PWR	8.29E+00	9	3	3
St Lucie-1	PWR62	839	FL	2	PWR	7.88E+00	9	3	3

TABLE A-1
ESTIMATED GTCC LLW CANISTER NUMBERS FOR US REACTORS[a]
(continued)

Reactor	Reactor Number	Capacity MW(e)	State	NRC Region	Reactor Type	Volume (m^3)	Number AMCs (@0.94m^3)	Number TADs (3 AMCs per TAD)	Number Transportation Casks (1 TAD per cask)
St Lucie-2	PWR63	839	FL	2	PWR	7.88E+00	9	3	3
Waterford-3	PWR64	1,087	LA	4	PWR	1.02E+01	11	4	4
Calvert Cliffs-1	PWR65	873	MD	1	PWR	8.20E+00	9	3	3
Calvert Cliffs-2	PWR66	862	MD	1	PWR	8.10E+00	9	3	3
Palisades	PWR67	767	MI	3	PWR	7.21E+00	8	3	3
Fort Calhoun	PWR68	476	NE	4	PWR	4.47E+00	5	2	2
Ginna	PWR69	498	NY	1	PWR	4.68E+00	5	2	2
Projected PWR Subtotal						**6.22E+02**	**718**	**692**	**244**
Haddam Neck	SPWR1	602	CT	1	PWR	5.66E+00	7	3	3
Indian Point-1	SPWR2	203	NY	1	PWR	1.91E+00	3	1	1
Maine Yankee	SPWR3	891	ME	1	PWR	8.37E+00	9	3	3
Rancho Seco	SPWR4	915	CA	4	PWR	8.59E+00	10	4	4
San Onofre-1	SPWR5	445	CA	4	PWR	4.18E+00	5	2	2
Saxton	SPWR6	8	PA	1	PWR	7.52E-02	1	1	1
Yankee-Rowe	SPWR7	198	MA	1	PWR	1.86E+00	2	1	1
Zion-1	SPWR8	1,073	IL	3	PWR	1.01E+01	11	4	4
Zion-2	SPWR9	1,073	IL	3	PWR	1.01E+01	11	4	4
Stored PWR Subtotal						**5.08E+01**	**59**	**23**	**23**
							997	**365**	**365**

[a]Data source is Schelling, Leigh and Trone (2007)

APPENDIX B
ESTIMATED TAD CONTAINER ACTIVITIES FOR GTCC LLW FROM US REACTORS

The values shown in Tables B-1 and B-2 were calculated by dividing the radionuclide activities from Schelling, Leigh and Trone (2007) Table D-1 by the number of containers shown in Table A-1.

TABLE B-1
ESTIMATED CONTAINER ACTIVITIES FOR GTCC LLW FROM US REACTORS

Reactor	Reactor Number	No. TADs	Activity Per Container (Ci/container)							
			C-14	Mn-54	Fe-55	Ni-59	Co-60	Ni-63	Mo-93	Nb-94
Browns Ferry 1	BWR1	3	7.79E+01	4.87E+01	1.49E+05	4.72E+02	1.13E+05	6.23E+04	2.42E-01	1.11E+00
Browns Ferry 2	BWR2	3	8.17E+01	5.12E+01	1.57E+05	4.95E+02	1.19E+05	6.54E+04	2.54E-01	1.17E+00
Browns Ferry 3	BWR3	3	8.14E+01	5.10E+01	1.56E+05	4.94E+02	1.18E+05	6.52E+04	2.53E-01	1.16E+00
Fermi 2	BWR4	3	8.12E+01	5.08E+01	1.56E+05	4.92E+02	1.18E+05	6.50E+04	2.52E-01	1.16E+00
Hope Creek 1	BWR5	3	7.67E+01	4.80E+01	1.47E+05	4.65E+02	1.12E+05	6.14E+04	2.38E-01	1.10E+00
Peach Bottom 2	BWR6	3	8.13E+01	5.09E+01	1.56E+05	4.93E+02	1.18E+05	6.51E+04	2.52E-01	1.16E+00
Peach Bottom 3	BWR7	3	8.13E+01	5.09E+01	1.56E+05	4.93E+02	1.18E+05	6.51E+04	2.52E-01	1.16E+00
Susquehanna 1	BWR8	3	8.30E+01	5.19E+01	1.59E+05	5.03E+02	1.21E+05	6.64E+04	2.57E-01	1.19E+00
Susquehanna 2	BWR9	3	8.33E+01	5.22E+01	1.60E+05	5.05E+02	1.21E+05	6.67E+04	2.59E-01	1.19E+00
Limerick 1	BWR10	3	8.29E+01	5.19E+01	1.59E+05	5.02E+02	1.21E+05	6.63E+04	2.57E-01	1.18E+00
Limerick 2	BWR11	3	8.29E+01	5.19E+01	1.59E+05	5.02E+02	1.21E+05	6.63E+04	2.57E-01	1.18E+00
LaSalle County 1	BWR12	3	8.17E+01	5.12E+01	1.57E+05	4.95E+02	1.19E+05	6.54E+04	2.54E-01	1.17E+00
LaSalle County 2	BWR13	3	8.19E+01	5.12E+01	1.57E+05	4.96E+02	1.19E+05	6.55E+04	2.54E-01	1.17E+00
Nine Mile Point 2	BWR14	3	8.30E+01	5.19E+01	1.59E+05	5.03E+02	1.21E+05	6.64E+04	2.58E-01	1.19E+00
Columbia Generating Sta.	BWR15	3	8.20E+01	5.13E+01	1.57E+05	4.97E+02	1.19E+05	6.56E+04	2.55E-01	1.17E+00
Clinton	BWR16	3	7.62E+01	4.77E+01	1.46E+05	4.62E+02	1.11E+05	6.10E+04	2.37E-01	1.09E+00
River Bend 1	BWR17	3	7.08E+01	4.43E+01	1.36E+05	4.29E+02	1.03E+05	5.66E+04	2.20E-01	1.01E+00
Grand Gulf 1	BWR18	3	9.28E+01	5.81E+01	1.78E+05	5.63E+02	1.35E+05	7.43E+04	2.88E-01	1.33E+00
Perry 1	BWR19	3	9.03E+01	5.65E+01	1.73E+05	5.47E+02	1.31E+05	7.23E+04	2.80E-01	1.29E+00
Oyster Creek 1	BWR20	2	6.79E+01	4.25E+01	1.30E+05	4.11E+02	9.88E+04	5.43E+04	2.11E-01	9.70E-01
Nine Mile Point 1	BWR21	2	6.80E+01	4.26E+01	1.30E+05	4.12E+02	9.90E+04	5.45E+04	2.11E-01	9.72E-01
Dresden 2	BWR22	2	9.51E+01	5.95E+01	1.82E+05	5.76E+02	1.38E+05	7.61E+04	2.95E-01	1.36E+00
Dresden 3	BWR23	2	9.51E+01	5.95E+01	1.82E+05	5.76E+02	1.38E+05	7.61E+04	2.95E-01	1.36E+00
Quad Cities 1	BWR24	2	9.51E+01	5.95E+01	1.82E+05	5.76E+02	1.38E+05	7.61E+04	2.95E-01	1.36E+00
Quad Cities 2	BWR25	2	9.51E+01	5.95E+01	1.82E+05	5.76E+02	1.38E+05	7.61E+04	2.95E-01	1.36E+00
Pilgrim 1	BWR26	2	7.51E+01	4.70E+01	1.44E+05	4.55E+02	1.09E+05	6.01E+04	2.33E-01	1.07E+00
Monticello	BWR27	2	6.24E+01	3.91E+01	1.20E+05	3.78E+02	9.08E+04	4.99E+04	1.94E-01	8.92E-01

TABLE B-1
ESTIMATED CONTAINER ACTIVITIES FOR GTCC LLW FROM US REACTORS
(continued)

Reactor	Reactor Number	No. TADs	Activity Per Container (Ci/container)							
			C-14	Mn-54	Fe-55	Ni-59	Co-60	Ni-63	Mo-93	Nb-94
Edwin I. Hatch 1	BWR28	2	9.53E+01	5.96E+01	1.83E+05	5.78E+02	1.39E+05	7.63E+04	2.96E-01	1.36E+00
Edwin I. Hatch 2	BWR29	2	9.68E+01	6.06E+01	1.86E+05	5.87E+02	1.41E+05	7.75E+04	3.00E-01	1.38E+00
Duane Arnold	BWR30	2	6.17E+01	3.86E+01	1.18E+05	3.74E+02	8.97E+04	4.94E+04	1.91E-01	8.82E-01
Cooper	BWR31	2	8.29E+01	5.19E+01	1.59E+05	5.03E+02	1.21E+05	6.64E+04	2.57E-01	1.18E+00
James Fitzpatrick	BWR32	2	9.25E+01	5.79E+01	1.77E+05	5.61E+02	1.35E+05	7.41E+04	2.87E-01	1.32E+00
Brunswick 1	BWR33	3	6.86E+01	4.29E+01	1.31E+05	4.16E+02	9.98E+04	5.49E+04	2.13E-01	9.80E-01
Brunswick 2	BWR34	2	9.87E+01	6.18E+01	1.89E+05	5.98E+02	1.44E+05	7.90E+04	3.06E-01	1.41E+00
Vermont Yankee 1	BWR35	2	5.55E+01	3.47E+01	1.06E+05	3.36E+02	8.07E+04	4.44E+04	1.72E-01	7.93E-01
BWR Subtotal		**90**								
Big Rock Point	SBWR1	1	1.73E+01	2.54E-05	5.73E+02	1.05E+02	3.08E+03	1.25E+04	5.37E-02	2.48E-01
Dresden 1	SBWR2	1	5.04E+01	1.52E-11	1.34E+01	3.07E+02	7.40E+02	3.19E+04	1.56E-01	7.23E-01
GE VBWR	SBWR3	1	3.71E+00	5.86E-18	2.20E-02	2.26E+01	7.58E+00	2.12E+03	1.15E-02	5.32E-02
Humboldt Bay 3	SBWR4	1	1.44E+01	8.57E-13	2.31E+00	8.77E+01	1.62E+02	8.99E+03	4.46E-02	2.07E-01
La Crosse	SBWR5	1	1.19E+01	5.26E-09	3.11E+01	7.24E+01	5.69E+02	7.99E+03	3.69E-02	1.71E-01
Millstone 1	SBWR6	2	7.26E+01	2.39E-04	3.10E+03	4.41E+02	1.47E+04	5.25E+04	2.25E-01	1.04E+00
Pathfinder	SBWR7	1	1.37E+01	5.53E-16	2.24E-01	8.33E+01	4.73E+01	8.03E+03	4.23E-02	1.96E-01
Shutdown BWR Subtot		**8**								
Arkansas Nuclear One 1	PWR1	3	5.94E+01	1.87E+02	1.11E+05	3.16E+02	1.67E+05	4.59E+04	3.41E-01	1.90E+00
Crystal River 3	PWR2	3	5.92E+01	1.86E+02	1.11E+05	3.15E+02	1.66E+05	4.58E+04	3.40E-01	1.89E+00
Davis-Besse	PWR3	3	6.16E+01	1.94E+02	1.16E+05	3.28E+02	1.73E+05	4.77E+04	3.54E-01	1.97E+00
Three Mile Island 1	PWR4	3	5.72E+01	1.80E+02	1.07E+05	3.05E+02	1.61E+05	4.43E+04	3.28E-01	1.83E+00
Oconee 1	PWR5	3	5.97E+01	1.88E+02	1.12E+05	3.18E+02	1.68E+05	4.62E+04	3.43E-01	1.91E+00
Oconee 2	PWR6	3	5.97E+01	1.88E+02	1.12E+05	3.18E+02	1.68E+05	4.62E+04	3.43E-01	1.91E+00
Oconee 3	PWR7	3	5.97E+01	1.88E+02	1.12E+05	3.18E+02	1.68E+05	4.62E+04	3.43E-01	1.91E+00
Turkey Point 4	PWR8	3	4.89E+01	1.54E+02	9.18E+04	2.61E+02	1.38E+05	3.79E+04	2.81E-01	1.57E+00
Turkey Point 3	PWR9	3	4.89E+01	1.54E+02	9.18E+04	2.61E+02	1.38E+05	3.79E+04	2.81E-01	1.57E+00
Prairie Island 1	PWR10	2	5.53E+01	1.74E+02	1.04E+05	2.94E+02	1.56E+05	4.28E+04	3.17E-01	1.77E+00
Prairie Island 2	PWR11	2	5.53E+01	1.74E+02	1.04E+05	2.94E+02	1.56E+05	4.28E+04	3.17E-01	1.77E+00

TABLE B-1
ESTIMATED CONTAINER ACTIVITIES FOR GTCC LLW FROM US REACTORS
(continued)

Reactor	Reactor Number	No. TADs	Activity Per Container (Ci/container)							
			C-14	Mn-54	Fe-55	Ni-59	Co-60	Ni-63	Mo-93	Nb-94
H.B. Robinson 2	PWR12	3	5.01E+01	1.58E+02	9.40E+04	2.67E+02	1.41E+05	3.88E+04	2.88E-01	1.60E+00
Point Beach 1	PWR1	2	5.42E+01	1.71E+02	1.02E+05	2.89E+02	1.53E+05	4.20E+04	3.11E-01	1.73E+00
Point Beach 2	PWR2	2	5.49E+01	1.73E+02	1.03E+05	2.92E+02	1.54E+05	4.25E+04	3.15E-01	1.75E+00
Kewaunee	PWR3	2	5.93E+01	1.87E+02	1.11E+05	3.16E+02	1.67E+05	4.59E+04	3.41E-01	1.90E+00
Joseph M. Farley 1	PWR4	3	6.01E+01	1.89E+02	1.13E+05	3.20E+02	1.69E+05	4.65E+04	3.45E-01	1.92E+00
Joseph M. Farley 2	PWR5	3	6.07E+01	1.91E+02	1.14E+05	3.23E+02	1.71E+05	4.70E+04	3.49E-01	1.94E+00
Diablo Canyon 1	PWR6	4	5.76E+01	1.81E+02	1.08E+05	3.06E+02	1.62E+05	4.45E+04	3.30E-01	1.84E+00
Diablo Canyon 2	PWR7	4	5.76E+01	1.81E+02	1.08E+05	3.06E+02	1.62E+05	4.45E+04	3.30E-01	1.84E+00
Millstone 3	PWR8	4	6.12E+01	1.92E+02	1.15E+05	3.26E+02	1.72E+05	4.73E+04	3.51E-01	1.96E+00
Vogtle 1	PWR9	4	6.10E+01	1.92E+02	1.14E+05	3.25E+02	1.72E+05	4.72E+04	3.50E-01	1.95E+00
Vogtle 2	PWR10	4	6.08E+01	1.91E+02	1.14E+05	3.24E+02	1.71E+05	4.71E+04	3.49E-01	1.95E+00
Braidwood 1	PWR11	4	6.24E+01	1.96E+02	1.17E+05	3.32E+02	1.76E+05	4.83E+04	3.58E-01	2.00E+00
Braidwood 2	PWR12	4	6.10E+01	1.92E+02	1.14E+05	3.25E+02	1.72E+05	4.72E+04	3.50E-01	1.95E+00
Byron 1	PWR25	4	6.16E+01	1.94E+02	1.16E+05	3.28E+02	1.73E+05	4.77E+04	3.54E-01	1.97E+00
Byron 2	PWR26	4	6.02E+01	1.89E+02	1.13E+05	3.20E+02	1.69E+05	4.65E+04	3.45E-01	1.92E+00
Wolf Creek 1	PWR27	4	6.17E+01	1.94E+02	1.16E+05	3.29E+02	1.74E+05	4.78E+04	3.54E-01	1.98E+00
D.C. Cook 1	PWR28	4	5.38E+01	1.69E+02	1.01E+05	2.86E+02	1.51E+05	4.16E+04	3.09E-01	1.72E+00
D.C. Cook 2	PWR29	4	5.70E+01	1.79E+02	1.07E+05	3.04E+02	1.60E+05	4.41E+04	3.27E-01	1.82E+00
Callaway	PWR30	4	6.02E+01	1.89E+02	1.13E+05	3.21E+02	1.69E+05	4.66E+04	3.46E-01	1.93E+00
Seabrook 1	PWR31	4	6.14E+01	1.93E+02	1.15E+05	3.27E+02	1.73E+05	4.75E+04	3.52E-01	1.96E+00
Salem 1	PWR32	4	6.22E+01	1.96E+02	1.17E+05	3.31E+02	1.75E+05	4.81E+04	3.57E-01	1.99E+00
Salem 2	PWR33	4	5.98E+01	1.88E+02	1.12E+05	3.19E+02	1.68E+05	4.63E+04	3.44E-01	1.91E+00
Indian Point 2	PWR34	4	5.18E+01	1.63E+02	9.72E+04	2.76E+02	1.46E+05	4.01E+04	2.98E-01	1.66E+00
Indian Point 3	PWR35	4	5.25E+01	1.65E+02	9.84E+04	2.79E+02	1.48E+05	4.06E+04	3.01E-01	1.68E+00
Shearon Harris 1	PWR36	3	6.35E+01	2.00E+02	1.19E+05	3.38E+02	1.79E+05	4.92E+04	3.65E-01	2.03E+00
McGuire 1	PWR37	4	5.82E+01	1.83E+02	1.09E+05	3.10E+02	1.64E+05	4.51E+04	3.34E-01	1.86E+00
McGuire 2	PWR38	4	5.82E+01	1.83E+02	1.09E+05	3.10E+02	1.64E+05	4.51E+04	3.34E-01	1.86E+00
Beaver Valley 1	PWR39	3	5.80E+01	1.82E+02	1.09E+05	3.09E+02	1.63E+05	4.49E+04	3.33E-01	1.85E+00
Beaver Valley 2	PWR40	3	5.87E+01	1.85E+02	1.10E+05	3.12E+02	1.65E+05	4.54E+04	3.37E-01	1.88E+00

TABLE B-1
ESTIMATED CONTAINER ACTIVITIES FOR GTCC LLW FROM US REACTORS
(continued)

Reactor	Reactor Number	No. TADs	Activity Per Container (Ci/container)							
			C-14	Mn-54	Fe-55	Ni-59	Co-60	Ni-63	Mo-93	Nb-94
Catawba 1	PWR41	4	5.98E+01	1.88E+02	1.12E+05	3.18E+02	1.68E+05	4.63E+04	3.43E-01	1.91E+00
Catawba 2	PWR42	4	5.98E+01	1.88E+02	1.12E+05	3.18E+02	1.68E+05	4.63E+04	3.43E-01	1.91E+00
Summer	PWR43	4	5.12E+01	1.61E+02	9.59E+04	2.72E+02	1.44E+05	3.96E+04	2.94E-01	1.64E+00
Sequoyah 1	PWR44	4	6.09E+01	1.92E+02	1.14E+05	3.24E+02	1.71E+05	4.71E+04	3.50E-01	1.95E+00
Sequoyah 2	PWR45	4	5.97E+01	1.88E+02	1.12E+05	3.18E+02	1.68E+05	4.62E+04	3.43E-01	1.91E+00
Watts Bar 1	PWR46	4	5.94E+01	1.87E+02	1.11E+05	3.16E+02	1.67E+05	4.59E+04	3.41E-01	1.90E+00
Comanche Peak 1	PWR47	4	6.09E+01	1.92E+02	1.14E+05	3.24E+02	1.71E+05	4.71E+04	3.50E-01	1.95E+00
Comanche Peak 2	PWR48	4	6.09E+01	1.92E+02	1.14E+05	3.24E+02	1.71E+05	4.71E+04	3.50E-01	1.95E+00
South Texas Project 1	PWR49	5	5.42E+01	1.71E+02	1.02E+05	2.89E+02	1.53E+05	4.20E+04	3.11E-01	1.73E+00
South Texas Project 2	PWR50	5	5.42E+01	1.71E+02	1.02E+05	2.89E+02	1.53E+05	4.20E+04	3.11E-01	1.73E+00
Surry 1	PWR51	3	5.64E+01	1.78E+02	1.06E+05	3.00E+02	1.59E+05	4.37E+04	3.24E-01	1.80E+00
Surry 2	PWR52	3	5.64E+01	1.78E+02	1.06E+05	3.00E+02	1.59E+05	4.37E+04	3.24E-01	1.80E+00
North Anna 1	PWR53	4	4.90E+01	1.54E+02	9.19E+04	2.61E+02	1.38E+05	3.79E+04	2.81E-01	1.57E+00
North Anna 2	PWR54	4	4.86E+01	1.53E+02	9.11E+04	2.59E+02	1.37E+05	3.76E+04	2.79E-01	1.55E+00
Palo Verde 1	PWR55	5	5.27E+01	1.66E+02	9.88E+04	2.80E+02	1.48E+05	4.07E+04	3.02E-01	1.68E+00
Palo Verde 2	PWR56	5	5.57E+01	1.75E+02	1.04E+05	2.96E+02	1.57E+05	4.31E+04	3.20E-01	1.78E+00
Palo Verde 3	PWR57	5	5.28E+01	1.66E+02	9.91E+04	2.81E+02	1.49E+05	4.09E+04	3.03E-01	1.69E+00
Arkansas Nuclear One 2	PWR58	4	5.27E+01	1.66E+02	9.89E+04	2.81E+02	1.48E+05	4.08E+04	3.03E-01	1.69E+00
San Onofre 2	PWR59	4	5.67E+01	1.78E+02	1.06E+05	3.02E+02	1.59E+05	4.38E+04	3.25E-01	1.81E+00
San Onofre 3	PWR60	4	5.72E+01	1.80E+02	1.07E+05	3.05E+02	1.61E+05	4.43E+04	3.28E-01	1.83E+00
Millstone 2	PWR61	3	6.23E+01	1.96E+02	1.17E+05	3.32E+02	1.75E+05	4.82E+04	3.58E-01	1.99E+00
St Lucie 1	PWR62	3	5.92E+01	1.86E+02	1.11E+05	3.15E+02	1.67E+05	4.58E+04	3.40E-01	1.89E+00
St Lucie 2	PWR63	3	5.92E+01	1.86E+02	1.11E+05	3.15E+02	1.67E+05	4.58E+04	3.40E-01	1.89E+00
Waterford 3	PWR64	4	5.76E+01	1.81E+02	1.08E+05	3.06E+02	1.62E+05	4.45E+04	3.30E-01	1.84E+00
Calvert Cliffs 1	PWR65	3	6.16E+01	1.94E+02	1.16E+05	3.28E+02	1.73E+05	4.77E+04	3.54E-01	1.97E+00
Calvert Cliffs 2	PWR66	3	6.09E+01	1.92E+02	1.14E+05	3.24E+02	1.71E+05	4.71E+04	3.49E-01	1.95E+00
Palisades	PWR67	3	5.42E+01	1.70E+02	1.02E+05	2.88E+02	1.52E+05	4.19E+04	3.11E-01	1.73E+00
Fort Calhoun	PWR68	2	5.04E+01	1.59E+02	9.45E+04	2.68E+02	1.42E+05	3.90E+04	2.89E-01	1.61E+00

TABLE B-1
ESTIMATED CONTAINER ACTIVITIES FOR GTCC LLW FROM US REACTORS
(continued)

Reactor	Reactor Number	No. TADs	Activity Per Container (Ci/container)							
			C-14	Mn-54	Fe-55	Ni-59	Co-60	Ni-63	Mo-93	Nb-94
Ginna	PWR69	2	5.27E+01	1.66E+02	9.89E+04	2.81E+02	1.48E+05	4.08E+04	3.03E-01	1.69E+00
PWR Subtotal		**244**								
Haddam Neck	SPWR1	3	4.24E+01	1.39E-04	1.07E+03	2.26E+02	1.28E+04	2.93E+04	2.43E-01	1.36E+00
Indian Point 1	SPWR2	1	4.28E+01	2.53E-12	4.05E+00	2.29E+02	7.17E+02	2.55E+04	2.45E-01	1.37E+00
Maine Yankee	SPWR3	3	6.28E+01	2.05E-04	1.58E+03	3.35E+02	1.89E+04	4.33E+04	3.60E-01	2.01E+00
Rancho Seco	SPWR4	4	4.83E+01	5.43E-07	2.05E+02	2.58E+02	5.81E+03	3.18E+04	2.77E-01	1.55E+00
San Onofre 1	SPWR5	2	4.70E+01	6.01E-06	4.27E+02	2.51E+02	8.37E+03	3.15E+04	2.69E-01	1.50E+00
Saxton	SPWR6	1	1.69E+00	1.97E-14	9.61E-02	9.03E+00	2.18E+01	9.90E+02	9.66E-03	5.42E-02
Yankee-Rowe	SPWR7	1	4.18E+01	2.38E-06	2.95E+02	2.23E+02	6.54E+03	2.79E+04	2.40E-01	1.34E+00
Zion 1	SPWR8	4	5.67E+01	9.38E-04	2.36E+03	3.02E+02	2.22E+04	3.96E+04	3.25E-01	1.82E+00
Zion 2	SPWR9	4	5.67E+01	9.38E-04	2.36E+03	3.02E+02	2.22E+04	3.96E+04	3.25E-01	1.82E+00
Shutdown PWR Subtot		**23**								
GRAND TOTAL		**365**								

APPENDIX C
ESTIMATED CANISTER NUMBERS FOR PROCESS WASTE

TABLE C-1
ESTIMATED CONTAINER NUMBER FOR PROCESS WASTE[a]

Owner	Description	Stored Unpacked Volume[a]	Projected Unpacked Volume[a]	Stored Packed Volume[a]	Projected Packed Volume[a]	Number of AMCs	Number of TADs[b]	Number of 55-gallon drums[c]
		(m^3)	(m^3)	(m^3)	(m^3)	No.	No.	No.
Stored CH Waste								
BWXT-Lynchburg VA (DOE waste at commercial facility)	Transuranic-contaminated waste	NG	NA	3.39	NA	6	2	17
Idaho National Laboratory	Other (31 mixed transuranic items)	NG	NA	19.4	NA	32	11	94
Idaho National Laboratory	Other (transuranic)	NG	NA	0.4	NA	1	1	2
Idaho National Laboratory	Other (10 radioactive only waste items)	NG	NA	39.9	NA	64	22	192
Commercial	Am-241,Cs-137	NG	NA	7	NA	12	4	34
Commercial	Am-241,Cs-137, Co-60	NG	NA	32	NA	52	18	154
Commercial	Am-241,Cs-137	NG	NA	4	NA	7	3	20
BJOR	MSRE ULCC	NG	NA	0.03	NA	1	1	1
West Valley	TRU waste	NG	NA	317	NA	509	170	1525
					Subtotal	**684**	**232**	**2039**
Stored RH Waste								
BWXT-Lynchburg VA (DOE waste at commercial facility)	Transuranic-contaminated waste	NG	NA	14.48	NA	24	8	8
Idaho National Laboratory	Other (remote handled transuranic)	NG	NA	8	NA	13	5	5
Oak Ridge (BJC-managed waste)	RH Fuel flush salts from Molten Salt Reactor Experiment (MSRE) (10 salt cans)	NG	NA	4.00	NA	7	3	3
Oak Ridge (BJC-managed waste)	Uranium laden charcoal canister from MSRE	0.03	NA	0.04	NA	1	1	1
Oak Ridge National Laboratory	RH waste	8.4	NA	11.20	NA	18	6	6

[a]Data source is Dixon (2007). In some cases sites gave unpackaged volumes. In some cases sites gave packaged volumes. If the site did not give the volume, it is marked as "NG". If a site gave unpackaged volumes, the packaged volume was calculated with a packaging factor of 1.33.

[b]Assuming 3 AMCs per TAD. This is also the number of NAC-STCs (1TAD per rail cask)

[c]Assuming 3 drums per AMC

TABLE C-1
ESTIMATED CONTAINER NUMBER FOR PROCESS WASTE (continued)

Owner	Description	Stored Unpacked Volume[a]	Projected Unpacked Volume[a]	Stored Packed Volume[a]	Projected Packed Volume[a]	Number of AMCs	Number of TADs[b]	Number of 55-gallon drums[c]
		(m^3)	(m^3)	(m^3)	(m^3)	No.	No.	No.
Oak Ridge National Laboratory	Scrap metal (RH)	14.1	NA	18.80	NA	31	11	11
Oak Ridge National Laboratory	Scrap metal (RH)	1.3	NA	1.73	NA	3	1	1
Oak Ridge National Laboratory	Process waste (RH)	70.2	NA	93.60	NA	150	50	50
Oak Ridge National Laboratory	Process waste (RH)	5.4	NA	7.20	NA	12	4	4
Oak Ridge National Laboratory	Irradiators (RH)	0.6	NA	0.80	NA	2	1	1
West Valley	TRU waste		NA	352.2	NA	565	189	189
Commercial	Misc TRU	33	NA	33	NA	53	18	18
					Subtotal	**879**	**297**	**2626**
Projected CH Waste								
BWXT-Lynchburg VA (DOE waste at commercial facility)	Potentially non-defense TRU from maintenance activities	NA	NG	NA	0.6	1	1	3
Proposed Radioisotope Power Systems (RPS) Project	Contact handled and remote handled TRU from proposed RPS operations, including target fabrication and plutonium purification	NA	NG	NA	875	1403	468	4207
West Valley	TRU waste	NA	NG	NA	112			539
					Subtotal	**1584**	**529**	**4749**
Projected RH Waste								
West Valley	Process Plant Demolition	NA	33	NA	99	159	53	476
West Valley	Specific D&D Project: SDS Columns, 8D-1	NA	NG	NA	384.52	617	206	1849
West Valley	Specific D&D Project: 8D-2 & 8D-4 (Waste Tank Farm – TRU)	NA	NG	NA	195.18	313	105	939
West Valley	Remote Handled Waste Facility Operations	NA		NA	35	57	19	169
Idaho National Laboratory	Other [Various] – (Solid)	NA	0.21	NA	0.65	2	1	4
Proposed Radioisotope Power	Contact handled and remote handled	NA	NG	NA	385	617	206	1851

TABLE C-1
ESTIMATED CONTAINER NUMBER FOR PROCESS WASTE (continued)

Owner	Description	Stored Unpacked Volume[a]	Projected Unpacked Volume[a]	Stored Packed Volume[a]	Projected Packed Volume[a]	Number of AMCs	Number of TADs[b]	Number of 55-gallon drums[c]
		(m^3)	(m^3)	(m^3)	(m^3)	No.	No.	No.
Systems (RPS) Project	TRU from proposed RPS operations, including target fabrication and plutonium purification							
Commercial	Misc TRU				0.21	1	1	2
					Subtotal	**677**	**227**	**2026**
					Total	**3824**	**1285**	**11440**

[a]Data source is Dixon (2007). In some cases sites gave unpackaged volumes. In some cases sites gave packaged volumes. If the site did not give the volume, it is marked as "NG". If a site gave unpackaged volumes, the packaged volume was calculated with a packaging factor of 1.33.

[b]Assuming 3 AMCs per TAD. This is also the number of NAC-STCs (1TAD per rail cask)

[c]Assuming 3 drums per AMC

APPENDIX D
ESTIMATED TAD CONTAINER ACTIVITIES FOR PROCESS WASTE

TABLE D-1
ESTIMATED ACTIVITIES FOR PROCESS WASTE[a]

Site	Waste Stream	Activity (Ci)								
		C-14	Mn-54	Fe-55	Co-60	Ni-59	Ni-63	Sr-90	Mo-93	Nb-94
Stored CH Waste										
BWXT-Lynchburg VA (DOE waste at commercial facility)	Transuranic-contaminated waste	2.43E-05	0.00E+00	0.00E+00	6.39E-08	1.54E-06	6.80E-05	8.06E-01	0.00E+00	0.00E+00
Idaho National Laboratory	Other (31 mixed transuranic items)	1.39E-06	0.00E+00	4.86E-04	1.29E-02	2.70E-04	3.52E-02	1.37E+01	0.00E+00	0.00E+00
Idaho National Laboratory	Other (transuranic)	0.00E+00	0.00E+00	0.00E+00	8.25E-03	0.00E+00	0.00E+00	0.00E+00	0.00E+00	0.00E+00
Idaho National Laboratory	Other (10 radioactive only waste items)	0.00E+00	0.00E+00	0.00E+00	0.00E+00	0.00E+00	0.00E+00	0.00E+00	0.00E+00	0.00E+00
Commercial	Am-241,Cs-137	0.00E+00	0.00E+00	0.00E+00	0.00E+00	0.00E+00	0.00E+00	0.00E+00	0.00E+00	0.00E+00
Commercial	Am-241,Cs-137, Co-60	0.00E+00	0.00E+00	0.00E+00	0.00E+00	0.00E+00	0.00E+00	0.00E+00	0.00E+00	0.00E+00
Commercial	Am-241,Cs-137	0.00E+00	0.00E+00	0.00E+00	0.00E+00	0.00E+00	0.00E+00	0.00E+00	0.00E+00	0.00E+00
BJOR	MSRE ULCC	0.00E+00	0.00E+00	0.00E+00	0.00E+00	0.00E+00	0.00E+00	4.57E-06	0.00E+00	0.00E+00
West Valley	TRU waste	4.07E+03	0.00E+00	1.87E+02	3.66E+00	0.00E+00	0.00E+00	3.01E+03	0.00E+00	0.00E+00
	Subtotal (Ci)	4.07E+03	0.00E+00	1.87E+02	3.69E+00	2.72E-04	3.53E-02	3.02E+03	0.00E+00	0.00E+00
Stored RH Waste										
BWXT-Lynchburg VA (DOE waste at commercial facility)	Transuranic-contaminated waste	2.47E-03	0.00E+00	7.80E-06	3.55E-02	4.70E-02	2.08E+00	4.70E+02	0.00E+00	0.00E+00

[a]Data source is Dixon (2007

TABLE D-1
ESTIMATED ACTIVITIES FOR PROCESS WASTE (continued)

Site	Waste Stream	Activity (Ci)								
		C-14	Mn-54	Fe-55	Co-60	Ni-59	Ni-63	Sr-90	Mo-93	Nb-94
Idaho National Laboratory	Other (remote handled transuranic)	0.00E+00	0.00E+00	0.00E+00	0.00E+00	0.00E+00	0.00E+00	0.00E+00	0.00E+00	0.00E+00
Oak Ridge (BJC-managed waste)	RH Fuel flush salts from Molten Salt Reactor Experiment (MSRE) (10 salt cans)	(a)	(a)	(a)	(a)	(a)	(a)	(a)	(a)	(a)
Oak Ridge (BJC-managed waste)	Uranium laden charcoal canister from MSRE	(a)	(a)	(a)	(a)	(a)	(a)	(a)	(a)	(a)
Oak Ridge National Laboratory	RH waste	(a)	(a)	(a)	(a)	(a)	(a)	(a)	(a)	(a)
Oak Ridge National Laboratory	Scrap metal (RH)	(a)	(a)	(a)	(a)	(a)	(a)	(a)	(a)	(a)
Oak Ridge National Laboratory	Scrap metal (RH)	(a)	(a)	(a)	(a)	(a)	(a)	(a)	(a)	(a)
Oak Ridge National Laboratory	Process waste (RH)	(a)	(a)	(a)	(a)	(a)	(a)	(a)	(a)	(a)
Oak Ridge National Laboratory	Process waste (RH)	(a)	(a)	(a)	(a)	(a)	(a)	(a)	(a)	(a)
Oak Ridge National Laboratory	Irradiators (RH)	0.00E+00	0.00E+00	0.00E+00	1.40E+02	0.00E+00	0.00E+00	2.62E+03	0.00E+00	0.00E+00
West Valley	TRU waste	1.97E+05	0.00E+00	2.69E+02	1.03E+04	8.04E+03	4.12E+05	2.21E+05	0.00E+00	0.00E+00
Commercial	Misc TRU[a]	5.62E-03	0.00E+00	1.78E-05	1.35E+00	1.07E-01	4.74E+00	1.07E+03	0.00E+00	0.00E+00
	Subtotal (Ci)	1.97E+05	0.00E+00	2.69E+02	1.04E+04	8.04E+03	4.12E+05	2.25E+05	0.00E+00	0.00E+00
Projected CH Waste										
BWXT-Lynchburg VA (DOE waste at commercial	Potentially non-defense TRU from maintenance activities	4.31E-06	0.00E+00	0.00E+00	3.50E-06	2.72E-07	1.33E-05	2.00E-01	0.00E+00	0.00E+00

TABLE D-1
ESTIMATED ACTIVITIES FOR PROCESS WASTE (continued)

Site	Waste Stream	Activity (Ci)								
		C-14	Mn-54	Fe-55	Co-60	Ni-59	Ni-63	Sr-90	Mo-93	Nb-94
facility)										
Proposed Radioisotope Power Systems (RPS) Project	Contact handled and remote handled TRU from proposed RPS operations, including target fabrication and plutonium purification	0.00E+00	0.00E+00	0.00E+00	0.00E+00	0.00E+00	0.00E+00	0.00E+00	0.00E+00	0.00E+00
West Valley	TRU waste	1.47E+03	2.35E+00	2.35E+03	8.31E+00	0.00E+00	0.00E+00	1.35E+05	0.00E+00	0.00E+00
	Subtotal (Ci)	1.47E+03	2.35E+00	2.35E+03	8.31E+00	2.72E-07	1.33E-05	1.35E+05	0.00E+00	0.00E+00
Projected RH Waste										
West Valley	Process Plant Demolition	(b)	(b)	(b)	(b)	(b)	(b)	(b)	(b)	(b)
West Valley	Specific D&D Project: SDS Columns, 8D-1	(b)	(b)	(b)	(b)	(b)	(b)	(b)	(b)	(b)
West Valley	Specific D&D Project: 8D-2 & 8D-4 (Waste Tank Farm – TRU)	(b)	(b)	(b)	(b)	(b)	(b)	(b)	(b)	(b)
West Valley	Remote Handled Waste Facility Operations	8.12E+00	0.00E+00	1.15E+01	1.09E+02	1.32E+01	8.46E+02	5.77E+02	0.00E+00	8.12E-03
Idaho National Laboratory	Other [Various] – (Solid)	2.83E-03	5.41E-06	2.64E+02	1.30E+02	1.56E+01	1.51E+03	0.00E+00	7.77E-03	1.93E-02
Proposed Radioisotope Power Systems (RPS) Project	Contact handled and remote handled TRU from proposed RPS operations, including target fabrication and plutonium purification	0.00E+00	0.00E+00	0.00E+00	0.00E+00	0.00E+00	0.00E+00	2.22E+04	0.00E+00	0.00E+00
Commercial	Misc TRU[a]	1.71E-04	2.87E-04	1.88E-05	2.58E-01	3.25E-03	1.58E-01	4.55E+01	0.00E+00	0.00E+00
	Subtotal (Ci)	8.12E+00	2.92E-04	2.75E+02	2.39E+02	2.88E+01	2.36E+03	2.28E+04	7.77E-03	2.74E-02
	Total (Ci)	2.02E+05	2.35E+00	3.08E+03	1.07E+04	8.07E+03	4.15E+05	3.85E+05	7.77E-03	2.74E-02

(a) ORNL provided activities for the sum of the waste they reported in the RH Stored category. Those activities are included here in the row marked "Irradiators (RH)."

(b) West Valley provided activities for the sum of the waste they reported in the RH Projected category. Those activities are included here in the row marked "Remote Handled Waste Facility Operations."

TABLE D-1
ESTIMATED ACTIVITIES FOR PROCESS WASTE (continued)

Site	Waste Stream	Activity (Ci)								
		Tc-99	Cs-137	Pb-210	Th-229	Th-230	U-233	U-235	Np-237	Pu-238
Stored CH Waste										
BWXT-Lynchburg VA (DOE waste at commercial facility)	Transuranic-contaminated waste	2.94E-03	1.08E-01	2.46E-05	2.73E-05	1.92E-06	2.21E-02	7.84E-05	1.25E-04	2.61E+01
Idaho National Laboratory	Other (31 mixed transuranic items)	3.73E-03	1.41E+01	3.57E-06	4.06E-05	5.27E-03	3.98E-05	8.73E-05	4.29E-01	1.05E+00
Idaho National Laboratory	Other (transuranic)	0.00E+00	4.39E+01	0.00E+00	0.00E+00	0.00E+00	6.13E+00	8.64E-05	0.00E+00	0.00E+00
Idaho National Laboratory	Other (10 radioactive only waste items)	0.00E+00	0.00E+00	0.00E+00	0.00E+00	0.00E+00	0.00E+00	0.00E+00	0.00E+00	0.00E+00
Commercial	Am-241,Cs-137	0.00E+00	0.00E+00	0.00E+00	0.00E+00	0.00E+00	0.00E+00	0.00E+00	0.00E+00	0.00E+00
Commercial	Am-241,Cs-137, Co-60	0.00E+00	5.94E+00	0.00E+00	0.00E+00	0.00E+00	0.00E+00	0.00E+00	0.00E+00	0.00E+00
Commercial	Am-241,Cs-137	0.00E+00	0.00E+00	0.00E+00	0.00E+00	0.00E+00	0.00E+00	0.00E+00	0.00E+00	0.00E+00
BJOR	MSRE ULCC	0.00E+00	0.00E+00	0.00E+00	0.00E+00	0.00E+00	0.00E+00	0.00E+00	0.00E+00	1.09E-03
West Valley	TRU waste	1.53E+02	1.67E+03	0.00E+00	6.78E+02	1.22E+02	4.69E+03	9.37E+00	1.49E+01	3.53E+05
	Subtotal (Ci)	1.53E+02	1.74E+03	2.82E-05	6.78E+02	1.22E+02	4.69E+03	9.37E+00	1.54E+01	3.53E+05
Stored RH Waste										
BWXT-Lynchburg VA (DOE waste at commercial facility)	Transuranic-contaminated waste	3.26E-01	6.31E+02	1.42E-09	3.77E-04	3.84E-06	2.60E-01	2.24E-03	1.37E-03	6.98E+00
Idaho National Laboratory	Other (remote handled transuranic)	0.00E+00	0.00E+00	0.00E+00	0.00E+00	0.00E+00	0.00E+00	0.00E+00	0.00E+00	0.00E+00
Oak Ridge (BJC-managed waste)	RH Fuel flush salts from Molten Salt Reactor Experiment (MSRE) (10 salt cans)	(a)	(a)	(a)	(a)	(a)	(a)	(a)	(a)	(a)
Oak Ridge (BJC-managed waste)	Uranium laden charcoal canister from MSRE	(a)	(a)	(a)	(a)	(a)	(a)	(a)	(a)	(a)
Oak Ridge National	RH waste	(a)	(a)	(a)	(a)	(a)	(a)	(a)	(a)	(a)

TABLE D-1
ESTIMATED ACTIVITIES FOR PROCESS WASTE (continued)

Site	Waste Stream	Activity (Ci)								
		Tc-99	Cs-137	Pb-210	Th-229	Th-230	U-233	U-235	Np-237	Pu-238
Laboratory										
Oak Ridge National Laboratory	Scrap metal (RH)	(a)	(a)	(a)	(a)	(a)	(a)	(a)	(a)	(a)
Oak Ridge National Laboratory	Scrap metal (RH)	(a)	(a)	(a)	(a)	(a)	(a)	(a)	(a)	(a)
Oak Ridge National Laboratory	Process waste (RH)	(a)	(a)	(a)	(a)	(a)	(a)	(a)	(a)	(a)
Oak Ridge National Laboratory	Process waste (RH)	(a)	(a)	(a)	(a)	(a)	(a)	(a)	(a)	(a)
Oak Ridge National Laboratory	Irradiators (RH)	2.00E+00	6.66E+03	0.00E+00	0.00E+00	0.00E+00	7.75E+02	0.00E+00	0.00E+00	6.62E+02
West Valley	TRU waste	7.09E+03	1.90E+05	0.00E+00	2.44E+01	1.70E+01	1.49E+02	1.39E+01	1.85E+02	7.98E+03
Commercial	Misc TRU[a]	7.43E-01	1.44E+03	3.23E-09	8.60E-04	8.75E-06	5.92E-01	5.10E-03	3.12E-03	1.59E+01
	Subtotal (Ci)	7.09E+03	1.99E+05	4.64E-09	2.44E+01	1.70E+01	9.25E+02	1.39E+01	1.85E+02	8.67E+03
Projected CH Waste										
BWXT-Lynchburg VA (DOE waste at commercial facility)	Potentially non-defense TRU from maintenance activities	5.21E-04	2.63E-02	6.72E-06	4.83E-06	3.39E-07	3.92E-03	1.39E-05	2.22E-05	5.16E+00
Proposed Radioisotope Power Systems (RPS) Project	Contact handled and remote handled TRU from proposed RPS operations, including target fabrication and plutonium purification	0.00E+00	4.25E-07	0.00E+00	0.00E+00	0.00E+00	0.00E+00	0.00E+00	0.00E+00	2.03E+01
West Valley	TRU waste	6.00E+01	2.38E+05	0.00E+00	2.44E+02	4.40E+01	1.69E+03	3.38E+00	7.17E+00	1.42E+05
	Subtotal (Ci)	6.00E+01	2.38E+05	6.72E-06	2.44E+02	4.40E+01	1.69E+03	3.38E+00	7.17E+00	1.42E+05
Projected RH Waste										
West Valley	Process Plant Demolition	(b)	(b)	(b)	(b)	(b)	(b)	(b)	(b)	(b)

TABLE D-1
ESTIMATED ACTIVITIES FOR PROCESS WASTE (continued)

Site	Waste Stream	Activity (Ci)								
		Tc-99	Cs-137	Pb-210	Th-229	Th-230	U-233	U-235	Np-237	Pu-238
West Valley	Specific D&D Project: SDS Columns, 8D-1	(b)	(b)	(b)	(b)	(b)	(b)	(b)	(b)	(b)
West Valley	Specific D&D Project: 8D-2 & 8D-4 (Waste Tank Farm – TRU)	(b)	(b)	(b)	(b)	(b)	(b)	(b)	(b)	(b)
West Valley	Remote Handled Waste Facility Operations	1.32E+01	4.81E+02	0.00E+00	6.10E-03	2.23E-03	2.69E-01	2.13E-02	1.06E-01	1.64E+01
Idaho National Laboratory	Other [Various] – (Solid)	1.42E-03	0.00E+00	0.00E+00	0.00E+00	0.00E+00	0.00E+00	0.00E+00	0.00E+00	0.00E+00
Proposed Radioisotope Power Systems (RPS) Project	Contact handled and remote handled TRU from proposed RPS operations, including target fabrication and plutonium purification	0.00E+00	6.55E+04	0.00E+00	0.00E+00	0.00E+00	0.00E+00	0.00E+00	5.68E+00	3.00E+03
Commercial	Misc TRU[a]	2.25E-02	6.02E+01	1.51E-10	2.61E-05	2.65E-07	1.79E-02	1.54E-04	9.47E-05	5.38E-01
	Subtotal (Ci)	1.32E+01	6.61E+04	1.51E-10	6.13E-03	2.23E-03	2.87E-01	2.14E-02	5.78E+00	3.01E+03
	Total (Ci)	7.31E+03	5.05E+05	3.49E-05	9.47E+02	1.83E+02	7.31E+03	2.66E+01	2.13E+02	5.07E+05

(a) ORNL provided activities for the sum of the waste they reported in the RH Stored category. Those activities are included here in the row marked "Irradiators (RH)."

(b) West Valley provided activities for the sum of the waste they reported in the RH Projected category. Those activities are included here in the row marked "Remote Handled Waste Facility Operations."

TABLE D-1
ESTIMATED ACTIVITIES FOR PROCESS WASTE (continued)

Site	Waste Stream	Activity (Ci)						
		Pu-239	Pu-240	Pu-241	Am-241	Pu-242	Am-243	Cm-244
Stored CH Waste								
BWXT-Lynchburg VA (DOE waste at commercial facility)	Transuranic-contaminated waste	1.16E+01	1.89E+00	2.01E+01	9.34E+00	2.45E-04	1.56E-03	7.26E-02
Idaho National Laboratory	Other (31 mixed transuranic items)	1.12E+00	6.87E-02	4.36E+00	5.40E-01	6.00E-06	9.81E-06	4.27E-04
Idaho National Laboratory	Other (transuranic)	0.00E+00	0.00E+00	0.00E+00	1.24E+01	0.00E+00	0.00E+00	0.00E+00
Idaho National Laboratory	Other (10 radioactive only waste items)	0.00E+00	0.00E+00	0.00E+00	0.00E+00	0.00E+00	0.00E+00	0.00E+00
Commercial	Am-241,Cs-137	0.00E+00	0.00E+00	0.00E+00	0.00E+00	0.00E+00	0.00E+00	0.00E+00
Commercial	Am-241,Cs-137, Co-60	0.00E+00	0.00E+00	0.00E+00	5.02E+00	0.00E+00	0.00E+00	0.00E+00
Commercial	Am-241,Cs-137	0.00E+00	0.00E+00	0.00E+00	0.00E+00	0.00E+00	0.00E+00	0.00E+00
BJOR	MSRE ULCC	1.09E-02	4.15E-03	5.87E-04	0.00E+00	0.00E+00	0.00E+00	0.00E+00
West Valley	TRU waste	2.72E+05	2.17E+05	3.26E+06	9.57E+05	1.36E+03	1.04E+04	4.21E+02
	Subtotal (Ci)	2.72E+05	2.17E+05	3.26E+06	9.57E+05	1.36E+03	1.04E+04	4.21E+02
Stored RH Waste								
BWXT-Lynchburg VA (DOE waste at commercial facility)	Transuranic-contaminated waste	1.07E+01	3.23E+00	1.36E+02	2.77E+01	9.81E-04	2.03E-03	1.30E+00
Idaho National Laboratory	Other (remote handled transuranic)	0.00E+00	0.00E+00	0.00E+00	8.52E+01	0.00E+00	0.00E+00	0.00E+00
Oak Ridge (BJC-managed waste)	RH Fuel flush salts from Molten Salt Reactor Experiment (MSRE) (10 salt cans)	(a)	(a)	(a)	(a)	(a)	(a)	(a)
Oak Ridge (BJC-managed waste)	Uranium laden charcoal canister from MSRE	(a)	(a)	(a)	(a)	(a)	(a)	(a)

TABLE D-1
ESTIMATED ACTIVITIES FOR PROCESS WASTE (continued)

Site	Waste Stream	Activity (Ci)						
		Pu-239	Pu-240	Pu-241	Am-241	Pu-242	Am-243	Cm-244
Oak Ridge National Laboratory	RH waste	(a)	(a)	(a)	(a)	(a)	(a)	(a)
Oak Ridge National Laboratory	Scrap metal (RH)	(a)	(a)	(a)	(a)	(a)	(a)	(a)
Oak Ridge National Laboratory	Scrap metal (RH)	(a)	(a)	(a)	(a)	(a)	(a)	(a)
Oak Ridge National Laboratory	Process waste (RH)	(a)	(a)	(a)	(a)	(a)	(a)	(a)
Oak Ridge National Laboratory	Process waste (RH)	(a)	(a)	(a)	(a)	(a)	(a)	(a)
Oak Ridge National Laboratory	Irradiators (RH)	1.93E+02	3.10E+01	0.00E+00	0.00E+00	0.00E+00	0.00E+00	6.42E+02
West Valley	TRU waste	6.81E+04	5.15E+04	1.62E+05	2.93E+05	2.14E+02	2.35E+05	2.59E+04
Commercial	Misc TRU[a]	2.44E+01	7.37E+00	3.10E+02	6.31E+01	2.23E-03	4.62E-03	2.97E+00
	Subtotal (Ci)	6.83E+04	5.15E+04	1.62E+05	2.93E+05	2.14E+02	2.35E+05	2.66E+04
Projected CH Waste								
BWXT-Lynchburg VA (DOE waste at commercial facility)	Potentially non-defense TRU from maintenance activities	2.06E+00	3.35E-01	6.98E+00	1.69E+00	4.34E-05	2.77E-04	2.20E-02
Proposed Radioisotope Power Systems (RPS) Project	Contact handled and remote handled TRU from proposed RPS operations, including target fabrication and plutonium purification	4.21E+01	1.65E+01	4.17E+02	3.68E+01	0.00E+00	0.00E+00	0.00E+00
West Valley	TRU waste	9.79E+04	7.83E+04	2.30E+06	3.53E+05	4.89E+02	3.76E+03	5.29E+02
	Subtotal (Ci)	9.80E+04	7.83E+04	2.30E+06	3.53E+05	4.89E+02	3.76E+03	5.29E+02
Projected RH Waste								

TABLE D-1
ESTIMATED ACTIVITIES FOR PROCESS WASTE (continued)

Site	Waste Stream	Activity (Ci)						
		Pu-239	Pu-240	Pu-241	Am-241	Pu-242	Am-243	Cm-244
West Valley	Process Plant Demolition	(b)	(b)	(b)	(b)	(b)	(b)	(b)
West Valley	Specific D&D Project: SDS Columns, 8D-1	(b)	(b)	(b)	(b)	(b)	(b)	(b)
West Valley	Specific D&D Project: 8D-2 & 8D-4 (Waste Tank Farm – TRU)	(b)	(b)	(b)	(b)	(b)	(b)	(b)
West Valley	Remote Handled Waste Facility Operations	1.27E+02	9.61E+01	5.91E+02	1.16E+02	3.19E-01	7.11E+00	1.35E+00
Idaho National Laboratory	Other [Various] – (Solid)	0.00E+00	0.00E+00	0.00E+00	0.00E+00	0.00E+00	0.00E+00	0.00E+00
Proposed Radioisotope Power Systems (RPS) Project	Contact handled and remote handled TRU from proposed RPS operations, including target fabrication and plutonium purification	1.61E+00	6.88E-01	1.49E+02	3.92E+01	0.00E+00	0.00E+00	0.00E+00
Commercial	Misc TRU[a]	7.41E-01	2.24E-01	1.84E+01	1.95E+00	6.77E-05	1.40E-04	1.54E-01
	Subtotal (Ci)	1.29E+02	9.70E+01	7.59E+02	1.57E+02	3.19E-01	7.11E+00	1.50E+00
	Total (Ci)	4.38E+05	3.47E+05	5.72E+06	1.60E+06	2.06E+03	2.49E+05	2.75E+04

(a) ORNL provided activities for the sum of the waste they reported in the RH Stored category. Those activities are included here in the row marked "Irradiators (RH)."

(b) West Valley provided activities for the sum of the waste they reported in the RH Projected category. Those activities are included here in the row marked "Remote Handled Waste Facility Operations."

TABLE D-2
ESTIMATED TAD CONTAINER ACTIVITIES FOR PROCESS WASTE

Site	Waste Stream	Activity (Ci/Container)								
		C-14	Mn-54	Fe-55	Co-60	Ni-59	Ni-63	Sr-90	Mo-93	Nb-94
Stored CH Waste										
BWXT-Lynchburg VA (DOE waste at commercial facility)	Transuranic-contaminated waste	1.22E-05	0.00E+00	0.00E+00	3.19E-08	7.69E-07	3.40E-05	4.03E-01	0.00E+00	0.00E+00
Idaho National Laboratory	Other (31 mixed transuranic items)	1.26E-07	0.00E+00	4.42E-05	1.17E-03	2.46E-05	3.20E-03	1.24E+00	0.00E+00	0.00E+00
Idaho National Laboratory	Other (transuranic)	0.00E+00	0.00E+00	0.00E+00	8.25E-03	0.00E+00	0.00E+00	0.00E+00	0.00E+00	0.00E+00
Idaho National Laboratory	Other (10 radioactive only waste items)	0.00E+00	0.00E+00	0.00E+00	0.00E+00	0.00E+00	0.00E+00	0.00E+00	0.00E+00	0.00E+00
Commercial	Am-241,Cs-137	0.00E+00	0.00E+00	0.00E+00	0.00E+00	0.00E+00	0.00E+00	0.00E+00	0.00E+00	0.00E+00
Commercial	Am-241,Cs-137, Co-60	0.00E+00	0.00E+00	0.00E+00	0.00E+00	0.00E+00	0.00E+00	0.00E+00	0.00E+00	0.00E+00
Commercial	Am-241,Cs-137	0.00E+00	0.00E+00	0.00E+00	0.00E+00	0.00E+00	0.00E+00	0.00E+00	0.00E+00	0.00E+00
BJOR	MSRE ULCC	0.00E+00	0.00E+00	0.00E+00	0.00E+00	0.00E+00	0.00E+00	4.57E-06	0.00E+00	0.00E+00
West Valley	TRU waste	2.39E+01	0.00E+00	1.10E+00	2.16E-02	0.00E+00	0.00E+00	1.77E+01	0.00E+00	0.00E+00
	Subtotal (Ci)	1.75E+01	0.00E+00	8.04E-01	1.59E-02	1.17E-06	1.52E-04	1.30E+01	0.00E+00	0.00E+00
Stored RH Waste										
BWXT-Lynchburg VA (DOE waste at commercial facility)	Transuranic-contaminated waste	3.08E-04	0.00E+00	9.75E-07	4.43E-03	5.88E-03	2.60E-01	5.88E+01	0.00E+00	0.00E+00
Idaho National Laboratory	Other (remote handled transuranic)	0.00E+00	0.00E+00	0.00E+00	0.00E+00	0.00E+00	0.00E+00	0.00E+00	0.00E+00	0.00E+00

TABLE D-2
ESTIMATED TAD CONTAINER ACTIVITIES FOR PROCESS WASTE (continued)

Site	Waste Stream	Activity (Ci/Container)								
		C-14	Mn-54	Fe-55	Co-60	Ni-59	Ni-63	Sr-90	Mo-93	Nb-94
Oak Ridge (BJC-managed waste)	RH Fuel flush salts from Molten Salt Reactor Experiment (MSRE) (10 salt cans)	(a)	(a)	(a)	(a)	(a)	(a)	(a)	(a)	(a)
Oak Ridge (BJC-managed waste)	Uranium laden charcoal canister from MSRE	(a)	(a)	(a)	(a)	(a)	(a)	(a)	(a)	(a)
Oak Ridge National Laboratory	RH waste	(a)	(a)	(a)	(a)	(a)	(a)	(a)	(a)	(a)
Oak Ridge National Laboratory	Scrap metal (RH)	(a)	(a)	(a)	(a)	(a)	(a)	(a)	(a)	(a)
Oak Ridge National Laboratory	Scrap metal (RH)	(a)	(a)	(a)	(a)	(a)	(a)	(a)	(a)	(a)
Oak Ridge National Laboratory	Process waste (RH)	(a)	(a)	(a)	(a)	(a)	(a)	(a)	(a)	(a)
Oak Ridge National Laboratory	Process waste (RH)	(a)	(a)	(a)	(a)	(a)	(a)	(a)	(a)	(a)
Oak Ridge National Laboratory	Irradiators (RH)	0.00E+00	0.00E+00	0.00E+00	1.40E+02	0.00E+00	0.00E+00	2.62E+03	0.00E+00	0.00E+00
West Valley	TRU waste	1.04E+03	0.00E+00	1.43E+00	5.44E+01	4.25E+01	2.18E+03	1.17E+03	0.00E+00	0.00E+00
Commercial	Misc TRU[a]	3.12E-04	0.00E+00	9.88E-07	7.49E-02	5.96E-03	2.64E-01	5.95E+01	0.00E+00	0.00E+00
	Subtotal (Ci)	6.62E+02	0.00E+00	9.07E-01	3.51E+01	2.71E+01	1.39E+03	7.57E+02	0.00E+00	0.00E+00
Projected CH Waste										
BWXT-Lynchburg VA (DOE waste at commercial facility)	Potentially non-defense TRU from maintenance activities	4.31E-06	0.00E+00	0.00E+00	3.50E-06	2.72E-07	1.33E-05	2.00E-01	0.00E+00	0.00E+00
Proposed Radioisotope	Contact handled and remote handled TRU	0.00E+00	0.00E+00	0.00E+00	0.00E+00	0.00E+00	0.00E+00	0.00E+00	0.00E+00	0.00E+00

TABLE D-2
ESTIMATED TAD CONTAINER ACTIVITIES FOR PROCESS WASTE (continued)

Site	Waste Stream	Activity (Ci/Container)								
		C-14	Mn-54	Fe-55	Co-60	Ni-59	Ni-63	Sr-90	Mo-93	Nb-94
Power Systems (RPS) Project	from proposed RPS operations, including target fabrication and plutonium purification									
West Valley	TRU waste	2.44E+01	3.91E-02	3.91E+01	1.39E-01	0.00E+00	0.00E+00	2.24E+03	0.00E+00	0.00E+00
	Subtotal (Ci)	2.77E+00	4.44E-03	4.44E+00	1.57E-02	5.15E-10	2.50E-08	2.54E+02	0.00E+00	0.00E+00
Projected RH Waste										
West Valley	Process Plant Demolition	(b)	(b)	(b)	(b)	(b)	(b)	(b)	(b)	(b)
West Valley	Specific D&D Project: SDS Columns, 8D-1	(b)	(b)	(b)	(b)	(b)	(b)	(b)	(b)	(b)
West Valley	Specific D&D Project: 8D-2 & 8D-4 (Waste Tank Farm – TRU)	(b)	(b)	(b)	(b)	(b)	(b)	(b)	(b)	(b)
West Valley	Remote Handled Waste Facility Operations	4.27E-01	0.00E+00	6.04E-01	5.72E+00	6.93E-01	4.45E+01	3.03E+01	0.00E+00	4.27E-04
Idaho National Laboratory	Other [Various] – (Solid)	2.83E-03	5.41E-06	2.64E+02	1.30E+02	1.56E+01	1.51E+03	0.00E+00	7.77E-03	1.93E-02
Proposed Radioisotope Power Systems (RPS) Project	Contact handled and remote handled TRU from proposed RPS operations, including target fabrication and plutonium purification	0.00E+00	0.00E+00	0.00E+00	0.00E+00	0.00E+00	0.00E+00	1.08E+02	0.00E+00	0.00E+00
Commercial	Misc TRU[a]	1.71E-04	2.87E-04	1.88E-05	2.58E-01	3.25E-03	1.58E-01	4.55E+01	0.00E+00	0.00E+00
	Subtotal (Ci)	3.58E-02	1.29E-06	1.21E+00	1.05E+00	1.27E-01	1.04E+01	1.00E+02	3.42E-05	1.21E-04
	Total (Ci)	1.57E+02	1.83E-03	2.40E+00	8.31E+00	6.28E+00	3.23E+02	3.00E+02	6.05E-06	2.13E-05

(a) ORNL provided activities for the sum of the waste they reported in the RH Stored category. Those activities are included here in the row marked "Irradiators (RH)."
(b) West Valley provided activities for the sum of the waste they reported in the RH Projected category. Those activities are included here in the row marked "Remote Handled Waste Facility Operations."

TABLE D-2
ESTIMATED TAD CONTAINER ACTIVITIES FOR PROCESS WASTE (continued)

Site	Waste Stream	Activity (Ci/Container)								
		Tc-99	Cs-137	Pb-210	Th-229	Th-230	U-233	U-235	Np-237	Pu-238
Stored CH Waste										
BWXT-Lynchburg VA (DOE waste at commercial facility)	Transuranic-contaminated waste	1.47E-03	5.38E-02	1.23E-05	1.36E-05	9.59E-07	1.11E-02	3.92E-05	6.26E-05	1.30E+01
Idaho National Laboratory	Other (31 mixed transuranic items)	3.39E-04	1.28E+00	3.24E-07	3.69E-06	4.79E-04	3.62E-06	7.94E-06	3.90E-02	9.57E-02
Idaho National Laboratory	Other (transuranic)	0.00E+00	4.39E+01	0.00E+00	0.00E+00	0.00E+00	6.13E+00	8.64E-05	0.00E+00	0.00E+00
Idaho National Laboratory	Other (10 radioactive only waste items)	0.00E+00	0.00E+00	0.00E+00	0.00E+00	0.00E+00	0.00E+00	0.00E+00	0.00E+00	0.00E+00
Commercial	Am-241,Cs-137	0.00E+00	0.00E+00	0.00E+00	0.00E+00	0.00E+00	0.00E+00	0.00E+00	0.00E+00	0.00E+00
Commercial	Am-241,Cs-137, Co-60	0.00E+00	3.30E-01	0.00E+00	0.00E+00	0.00E+00	0.00E+00	0.00E+00	0.00E+00	0.00E+00
Commercial	Am-241,Cs-137	0.00E+00	0.00E+00	0.00E+00	0.00E+00	0.00E+00	0.00E+00	0.00E+00	0.00E+00	0.00E+00
BJOR	MSRE ULCC	0.00E+00	0.00E+00	0.00E+00	0.00E+00	0.00E+00	0.00E+00	0.00E+00	0.00E+00	1.09E-03
West Valley	TRU waste	8.99E-01	9.84E+00	0.00E+00	3.99E+00	7.19E-01	2.76E+01	5.51E-02	8.79E-02	2.07E+03
	Subtotal (Ci)	6.59E-01	7.49E+00	1.21E-07	2.92E+00	5.27E-01	2.02E+01	4.04E-02	6.63E-02	1.52E+03
Stored RH Waste										
BWXT-Lynchburg VA (DOE waste at commercial facility)	Transuranic-contaminated waste	4.07E-02	7.89E+01	1.77E-10	4.72E-05	4.80E-07	3.24E-02	2.80E-04	1.71E-04	8.72E-01
Idaho National Laboratory	Other (remote handled transuranic)	0.00E+00	0.00E+00	0.00E+00	0.00E+00	0.00E+00	0.00E+00	0.00E+00	0.00E+00	0.00E+00
Oak Ridge (BJC-managed waste)	RH Fuel flush salts from Molten Salt Reactor Experiment (MSRE) (10 salt cans)	(a)	(a)	(a)	(a)	(a)	(a)	(a)	(a)	(a)
Oak Ridge (BJC-managed waste)	Uranium laden charcoal canister from MSRE	(a)	(a)	(a)	(a)	(a)	(a)	(a)	(a)	(a)
Oak Ridge	RH waste	(a)	(a)	(a)	(a)	(a)	(a)	(a)	(a)	(a)

TABLE D-2
ESTIMATED TAD CONTAINER ACTIVITIES FOR PROCESS WASTE (continued)

Site	Waste Stream	Activity (Ci/Container)								
		Tc-99	Cs-137	Pb-210	Th-229	Th-230	U-233	U-235	Np-237	Pu-238
National Laboratory										
Oak Ridge National Laboratory	Scrap metal (RH)	(a)	(a)	(a)	(a)	(a)	(a)	(a)	(a)	(a)
Oak Ridge National Laboratory	Scrap metal (RH)	(a)	(a)	(a)	(a)	(a)	(a)	(a)	(a)	(a)
Oak Ridge National Laboratory	Process waste (RH)	(a)	(a)	(a)	(a)	(a)	(a)	(a)	(a)	(a)
Oak Ridge National Laboratory	Process waste (RH)	(a)	(a)	(a)	(a)	(a)	(a)	(a)	(a)	(a)
Oak Ridge National Laboratory	Irradiators (RH)	2.00E+00	6.66E+03	0.00E+00	0.00E+00	0.00E+00	7.75E+02	0.00E+00	0.00E+00	6.62E+02
West Valley	TRU waste	3.75E+01	1.01E+03	0.00E+00	1.29E-01	8.97E-02	7.89E-01	7.33E-02	9.78E-01	4.22E+01
Commercial	Misc TRU[a]	4.13E-02	7.99E+01	1.79E-10	4.78E-05	4.86E-07	3.29E-02	2.83E-04	1.74E-04	8.83E-01
	Subtotal (Ci)	2.39E+01	6.71E+02	1.56E-11	8.23E-02	5.71E-02	3.11E+00	4.67E-02	6.23E-01	2.92E+01
Projected CH Waste										
BWXT-Lynchburg VA (DOE waste at commercial facility)	Potentially non-defense TRU from maintenance activities	5.21E-04	2.63E-02	6.72E-06	4.83E-06	3.39E-07	3.92E-03	1.39E-05	2.22E-05	5.16E+00
Proposed Radioisotope Power Systems (RPS) Project	Contact handled and remote handled TRU from proposed RPS operations, including target fabrication and plutonium purification	0.00E+00	9.08E-10	0.00E+00	0.00E+00	0.00E+00	0.00E+00	0.00E+00	0.00E+00	4.34E-02
West Valley	TRU waste	9.99E-01	3.97E+03	0.00E+00	4.07E+00	7.33E-01	2.81E+01	5.63E-02	1.20E-01	2.37E+03
	Subtotal (Ci)	1.13E-01	4.51E+02	1.27E-08	4.62E-01	8.32E-02	3.19E+00	6.38E-03	1.36E-02	2.69E+02
Projected RH Waste										
West Valley	Process Plant Demolition	(b)	(b)	(b)	(b)	(b)	(b)	(b)	(b)	(b)

TABLE D-2
ESTIMATED TAD CONTAINER ACTIVITIES FOR PROCESS WASTE (continued)

Site	Waste Stream	Activity (Ci/Container)								
		Tc-99	Cs-137	Pb-210	Th-229	Th-230	U-233	U-235	Np-237	Pu-238
West Valley	Specific D&D Project: SDS Columns, 8D-1	(b)	(b)	(b)	(b)	(b)	(b)	(b)	(b)	(b)
West Valley	Specific D&D Project: 8D-2 & 8D-4 (Waste Tank Farm – TRU)	(b)	(b)	(b)	(b)	(b)	(b)	(b)	(b)	(b)
West Valley	Remote Handled Waste Facility Operations	6.93E-01	2.53E+01	0.00E+00	3.21E-04	1.17E-04	1.41E-02	1.12E-03	5.59E-03	8.65E-01
Idaho National Laboratory	Other [Various] – (Solid)	1.42E-03	0.00E+00	0.00E+00	0.00E+00	0.00E+00	0.00E+00	0.00E+00	0.00E+00	0.00E+00
Proposed Radioisotope Power Systems (RPS) Project	Contact handled and remote handled TRU from proposed RPS operations, including target fabrication and plutonium purification	0.00E+00	3.18E+02	0.00E+00	0.00E+00	0.00E+00	0.00E+00	0.00E+00	2.76E-02	1.45E+01
Commercial	Misc TRU[a]	2.25E-02	6.02E+01	1.51E-10	2.61E-05	2.65E-07	1.79E-02	1.54E-04	9.47E-05	5.38E-01
	Subtotal (Ci)	5.81E-02	2.91E+02	6.66E-13	2.70E-05	9.82E-06	1.26E-03	9.45E-05	2.55E-02	1.33E+01
	Total (Ci)	5.69E+00	3.93E+02	2.71E-08	7.37E-01	1.43E-01	5.68E+00	2.07E-02	1.66E-01	3.94E+02

(a) ORNL provided activities for the sum of the waste they reported in the RH Stored category. Those activities are included here in the row marked "Irradiators (RH)."
(b) West Valley provided activities for the sum of the waste they reported in the RH Projected category. Those activities are included here in the row marked "Remote Handled Waste Facility Operations."

TABLE D-2
ESTIMATED TAD CONTAINER ACTIVITIES FOR PROCESS WASTE (continued)

Site	Waste Stream	Activity (Ci/Container)						
		Pu-239	Pu-240	Pu-241	Am-241	Pu-242	Am-243	Cm-244
Stored CH Waste								
BWXT-Lynchburg VA (DOE waste at commercial facility)	Transuranic-contaminated waste	5.81E+00	9.45E-01	1.01E+01	4.67E+00	1.23E-04	7.81E-04	3.63E-02
Idaho National Laboratory	Other (31 mixed transuranic items)	1.02E-01	6.25E-03	3.96E-01	4.91E-02	5.46E-07	8.92E-07	3.88E-05
Idaho National Laboratory	Other (transuranic)	0.00E+00	0.00E+00	0.00E+00	1.24E+01	0.00E+00	0.00E+00	0.00E+00
Idaho National Laboratory	Other (10 radioactive only waste items)	0.00E+00	0.00E+00	0.00E+00	0.00E+00	0.00E+00	0.00E+00	0.00E+00
Commercial	Am-241,Cs-137	0.00E+00	0.00E+00	0.00E+00	0.00E+00	0.00E+00	0.00E+00	0.00E+00
Commercial	Am-241,Cs-137, Co-60	0.00E+00	0.00E+00	0.00E+00	2.79E-01	0.00E+00	0.00E+00	0.00E+00
Commercial	Am-241,Cs-137	0.00E+00	0.00E+00	0.00E+00	0.00E+00	0.00E+00	0.00E+00	0.00E+00
BJOR	MSRE ULCC	1.09E-02	4.15E-03	5.87E-04	0.00E+00	0.00E+00	0.00E+00	0.00E+00
West Valley	TRU waste	1.60E+03	1.28E+03	1.91E+04	5.63E+03	7.99E+00	6.15E+01	2.48E+00
	Subtotal (Ci)	1.17E+03	9.36E+02	1.40E+04	4.12E+03	5.86E+00	4.50E+01	1.82E+00
BWXT-Lynchburg VA (DOE waste at commercial facility)	Transuranic-contaminated waste	1.34E+00	4.04E-01	**Stored RH Waste** 1.70E+01	3.46E+00	1.23E-04	2.53E-04	1.63E-01
Idaho National Laboratory	Other (remote handled transuranic)	0.00E+00	0.00E+00	0.00E+00	1.70E+01	0.00E+00	0.00E+00	0.00E+00
Oak Ridge (BJC-managed waste)	RH Fuel flush salts from Molten Salt Reactor Experiment (MSRE) (10 salt cans)	(a)	(a)	(a)	(a)	(a)	(a)	(a)
Oak Ridge (BJC-managed waste)	Uranium laden charcoal canister from MSRE	(a)	(a)	(a)	(a)	(a)	(a)	(a)
Oak Ridge	RH waste	(a)	(a)	(a)	(a)	(a)	(a)	(a)

TABLE D-2
ESTIMATED TAD CONTAINER ACTIVITIES FOR PROCESS WASTE (continued)

Site	Waste Stream	Activity (Ci/Container)						
		Pu-239	Pu-240	Pu-241	Am-241	Pu-242	Am-243	Cm-244
National Laboratory								
Oak Ridge National Laboratory	Scrap metal (RH)	(a)	(a)	(a)	(a)	(a)	(a)	(a)
Oak Ridge National Laboratory	Scrap metal (RH)	(a)	(a)	(a)	(a)	(a)	(a)	(a)
Oak Ridge National Laboratory	Process waste (RH)	(a)	(a)	(a)	(a)	(a)	(a)	(a)
Oak Ridge National Laboratory	Process waste (RH)	(a)	(a)	(a)	(a)	(a)	(a)	(a)
Oak Ridge National Laboratory	Irradiators (RH)	1.93E+02	3.10E+01	0.00E+00	0.00E+00	0.00E+00	0.00E+00	6.42E+02
West Valley	TRU waste	3.60E+02	2.72E+02	8.55E+02	1.55E+03	1.13E+00	1.24E+03	1.37E+02
Commercial	Misc TRU[a]	1.36E+00	4.09E-01	1.72E+01	3.50E+00	1.24E-04	2.57E-04	1.65E-01
	Subtotal (Ci)	2.30E+02	1.74E+02	5.46E+02	9.86E+02	7.19E-01	7.91E+02	8.94E+01
Projected CH Waste								
BWXT-Lynchburg VA (DOE waste at commercial facility)	Potentially non-defense TRU from maintenance activities	2.06E+00	3.35E-01	6.98E+00	1.69E+00	4.34E-05	2.77E-04	2.20E-02
Proposed Radioisotope Power Systems (RPS) Project	Contact handled and remote handled TRU from proposed RPS operations, including target fabrication and plutonium purification	9.00E-02	3.53E-02	8.91E-01	7.86E-02	0.00E+00	0.00E+00	0.00E+00
West Valley	TRU waste	1.63E+03	1.31E+03	3.83E+04	5.89E+03	8.15E+00	6.27E+01	8.81E+00
	Subtotal (Ci)	1.85E+02	1.48E+02	4.35E+03	6.68E+02	9.24E-01	7.12E+00	1.00E+00
Projected RH Waste								
West Valley	Process Plant Demolition	(b)	(b)	(b)	(b)	(b)	(b)	(b)

TABLE D-2
ESTIMATED TAD CONTAINER ACTIVITIES FOR PROCESS WASTE (continued)

Site	Waste Stream	Activity (Ci/Container)						
		Pu-239	Pu-240	Pu-241	Am-241	Pu-242	Am-243	Cm-244
West Valley	Specific D&D Project: SDS Columns, 8D-1	(b)	(b)	(b)	(b)	(b)	(b)	(b)
West Valley	Specific D&D Project: 8D-2 & 8D-4 (Waste Tank Farm – TRU)	(b)	(b)	(b)	(b)	(b)	(b)	(b)
West Valley	Remote Handled Waste Facility Operations	6.68E+00	5.06E+00	3.11E+01	6.12E+00	1.68E-02	3.74E-01	7.08E-02
Idaho National Laboratory	Other [Various] – (Solid)	0.00E+00	0.00E+00	0.00E+00	0.00E+00	0.00E+00	0.00E+00	0.00E+00
Proposed Radioisotope Power Systems (RPS) Project	Contact handled and remote handled TRU from proposed RPS operations, including target fabrication and plutonium purification	7.83E-03	3.34E-03	7.25E-01	1.90E-01	0.00E+00	0.00E+00	0.00E+00
Commercial	Misc TRU[a]	7.41E-01	2.24E-01	1.84E+01	1.95E+00	6.77E-05	1.40E-04	1.54E-01
	Subtotal (Ci)	5.69E-01	4.27E-01	3.34E+00	6.94E-01	1.41E-03	3.13E-02	6.61E-03
	Total (Ci)	3.41E+02	2.70E+02	4.45E+03	1.25E+03	1.60E+00	1.94E+02	2.14E+01

(c) ORNL provided activities for the sum of the waste they reported in the RH Stored category. Those activities are included here in the row marked "Irradiators (RH)."

(d) West Valley provided activities for the sum of the waste they reported in the RH Projected category. Those activities are included here in the row marked "Remote Handled Waste Facility Operations."

APPENDIX F

Supporting Other Miscellaneous Waste Inventory Estimates for the Greater-Than-Class-C Low-Level Radioactive Waste Environmental Impact Statement Evaluations

Trone, J. R.

549006

Supporting Other Miscellaneous Waste Inventory Estimates for the Greater-Than-Class-C Low-Level Radioactive Waste Environmental Impact Statement Evaluations

Supersedes ERMS 547017

Author:	Janis Trone		5/19/08
	Print	Signature	Date
Technical Review:	Lori Dotson	Shannon Casey for Lori Dotson	5/19/08
	Print	Signature	Date
Management Review:	Christi Leigh		5/19/08
	Print	Signature	Date

GTCC-EIS:AR:3.2:545078

Table of Contents

1 Introduction 4

2 Estimated Volumes 4

3 Estimated Activities 4

4 Packages 5

5 References 6

List of Tables

Table 1 GTCC LLW and DOE GTCC-Like Process Waste Included in the Inventory for the GTCC LLW EIS[a] 8
Table 2 WIPP Reference Activities for CH and RH Waste 13
Table 3 GTCC LLW and DOE GTCC-Like Process Stored Waste Activity Summary[a] 14
Table 4 GTCC LLW and DOE GTCC-Like Process Waste Activities at the Time Waste is Available for Disposal[a] 26
Table 5 GTCC LLW and DOE GTCC-Like Process Waste Volumes and Containers 41
Table 6 GTCC LLW and DOE GTCC-Like Process Waste Stream Activities 47
Table 7 GTCC LLW and DOE GTCC-Like Process Waste Stream Container Activities 53

ACRONYMS AND ABBREVIATIONS

AMC	Activated Metal Canister
BJOR	Bechtel-Jacobs Oak Ridge
BWXT	BWXT-Lynchburg Virginia
Ci	Curies
CNS	Chem-Nuclear Systems
DOE	U.S. Department of Energy
EIS	Environmental Impact Statement
GTCC	Greater-Than-Class-C
INL	Idaho National Laboratory
LLW	Low-Level Radioactive Waste
NAC-STC	NAC International Storage Transportation Container
NRC	U.S. Nuclear Regulatory Commission
ORNL	Oak Ridge National Laboratory
RH	Remote Handled
RPS	Proposed Radioisotope Power Systems Project
SNL	Sandia National Laboratories
TAD	Transportation, Aging and Disposal
WVDP	West Valley Demonstration Project

1 Introduction

The focus of the upcoming Greater-Than-Class-C (GTCC) low-level radioactive waste (LLW) Disposal Environmental Impact Statement (EIS) is to evaluate the potential environmental impacts from the construction, operation, closure and post-closure performance of a disposal facility for GTCC LLW and potentially Department of Energy (DOE) GTCC-like waste. This document presents estimates of the GTCC LLW inventory that might be expected from GTCC LLW and DOE GTCC-like other waste. GTCC LLW and DOE GTCC-like other miscellaneous waste (here after referred to as other waste) includes the inventory of GTCC LLW and DOE GTCC-like waste other than activated metal and sealed sources.

This document supersedes Leigh et al. (2007) "Supporting Process Waste Inventory Estimates for the Greater-Than-Class-C Low-Level Radioactive Waste Environmental Impact Statement Evaluations".

2 Estimated Volumes

In response to the 2005 DOE data call, Bechtel-Jacobs Oak Ridge (BJOR), BWXT-Lynchburg Virginia (BWXT), Oak Ridge National Laboratories (ORNL), Idaho National Laboratory (INL), Radioisotope Power Systems (RPS), and West Valley Demonstration Project (WVDP) submitted data on DOE-owned waste other than activated metal and sealed sources (Dixon 2006). After a series of conference calls and discussions between the generator sites and the DOE, the inventory was revised (Dixon 2007), resulting in reduced inventories from BJOR and ORNL. In addition, a small amount of commercial GTCC LLW identified from two commercial entities located in Texas and Virginia was included in the inventory. WVDP provided updated information in April 2008 (Bohan 2008) which resulted in an increase to their previously reported inventory. In general, changes are due to improved estimates for preparing the Main Plant Process Building for decontamination and demolition. Additionally, previously reported in storage volumes of TRU waste reflected only those containers confirmed to be TRU, while the update includes containers managed as TRU but not confirmed to be TRU. Reported volumes for these wastes are shown in Table 1.

3 Estimated Activities

A compilation of the data provided by the individual sites resulted in a list of 162 radionuclides. WIPP radionuclide breakouts (Table 2) were used to estimate composition of wastes for which no nuclide information was available. Most of the radionuclides reported have low initial concentrations or very short half-lives. Therefore, this report will focus on twenty-five radionuclides with longer half-lives and which are present in significant concentrations to provide long term dose considerations. The reported activities for twenty-five radioisotopes are shown in Table 3 for stored waste. The assay date for the stored waste is assumed to be 2005 for all waste streams. It is assumed that stored waste becomes available for disposal in 2019. The radionuclide activities for the stored waste will be decayed for fourteen years, to 2019, using the standard decay equation:

$$A(t) = A_0 \, e^{-\ln(2)\, t / \tau} \quad (1)$$

Where:

A(t) is the activity in curies at time t (the decay time),

A_0 is the initial activity, and

τ is the half-life (KAPL 2002).

This formulation of Equation 1 only shows the decay term, because the production term (i.e., ingrowth) for the radionuclides being considered here is zero.

The 2019 activities for stored waste are shown in Table 4. Table 4 also shows the reported activities for projected waste. It is assumed that projected waste will be disposed of as it is generated. Therefore, the reported activity for projected waste is at the time the waste is available for disposal, and has not been decayed. In cases where a site did not submit activity data for individual radionuclides for their waste, identifying it only as contact or remote-handled waste, estimates of the composition of these wastes from WIPP were used. Table 2 contains the WIPP reference activities for CH and RH waste.

4 Packages

GTCC LLW and DOE GTCC-like other waste is packaged in 55-gallon drums, with the exception of WVDP stored CH-TRU waste streams, which will be packaged in standard waste boxes (SWBs). Calculated values for the number of shipping containers, shipments, and disposal packages are shown in Table 5. Calculations resulting in a partial container, shipment or disposal package were rounded up. The following assumptions were used to develop the values in Table 5:

- There are three 55-gallon drums per Activated Metal Canisters (AMCs) or Remote Handled (RH) canister.
- There are two SWBs, three AMC or RH canisters per Transportation, Aging and Disposal (TAD) canister.
- There is one TAD per NAC-STC (NRC 2006).
- There is one NAC-STC per rail car.
- There are fourteen 55-gallon drums or two SWBs per TRUPACT-II (Markley 2005).
- There are three TRUPACT-II per truck.
- There are four 55-gallon drums or one SWB per CNS 8-120B (NRC 2005) .
- There is one CNS8-120B per truck or per rail car

- There is one RH canister per RH 72B cask (U. S. DOE 2006).
- There is one RH 72B cask per truck.

Calculated activities for the other waste streams are shown in Table 6. The values in Table 6 are summary values from Table 4 and represent the activities at the time waste becomes available for disposal.

Calculated values for container activities are given in Table 7. The container activities given in Table 7 are 55-gallon drum equivalent. Container activities for the other container types can be calculated from the 55-gallon drum equivalent values as follows:

- For an SWB, multiply the drum values by 9
- For an AMC, multiply the drum values by 3
- For a RH canister, multiply the drum values by 3
- For a TAD loaded with 55-gallon drums, multiply the drum values by 9
- For a TAD loaded with SWBs, multiply the drum by 18
- For a TRUPACT-II loaded with 55-gallon drums, multiply the drum values by 14
- For a TRUPACT-II loaded with SWBs, multiply the drum values by 18
- For a CNS8-120B loaded with 55-gallon drums, multiply the drum values by 4
- For a CNS8-120B loaded with an SWB, multiply the drum values by 9
- For RH 72B values, multiply the drum values by 3
- For a NAC-STC loaded with 55-gallon drums, multiply the drum values by 9
- For a NAC-STC loaded with SWBs, multiply the drum values by 18

In general, the container activity is the total activity divided by the number of containers. Table 7 shows results of this calculation assuming a homogeneous group of containers from each site, from just the commercial sector, from DOE and total over the stored and projected volumes.

5 References

Bohan, C. (2008). GTCC Data Call -Updated Table and Report, Email from Cathy Bohan (WVDP) to Janis Trone (SNL) and George Dixon (DOE) with attachment. ERMS 548720. Department of Energy. West Valley, NY.

Dixon, G. (2006). DOE GTCC-Like Waste Data Call Responses. ERMS 545171. Department of Energy, EM. Washington, DC.

Dixon, G. (2007). Summary of Greater-Than-Class C (GTCC)-Like Waste Conference Calls Held on April 10, 2007. ERMS 546604. Department of Energy, EM. Washington, DC.

KAPL (2002). Nuclides and Isotopes, Chart of the Nuclides. Sixteenth Edition. KAPL, Inc.

Leigh, C. D. and B. Fox (2005). Radionuclides Expected to Dominate Potential Releases in the Performance Assessment Baseline Calculation, Revision 0. ERMS 539643. Sandia National Laboratories. Carlsbad, NM.

Leigh, C. D., J. Schelling, et al. (2007). Supporting Process Waste Inventory Estimates for the Greater-Than-Class-C Low-Level Radioactive Waste Environmental Impact Statement Evaluations. ERMS 547017. Sandia National Laboratories. Carlsbad, NM.

Markley, M. T. (2005). Certificates of Compliance for Model Nos. TRUPACT-II and HALFPACT Packages. ERMS 546599. Nuclear Regulatory Commission. Washington, DC.

NRC (2005). Certificate of Compliance for Radioactive Material Packages, CNS 8 -120B, Certificate Number 9168, Revision 15. ERMS 546602. Nuclear Regulator Commission. Washington, D.C.

NRC (2006). Certificate of Compliance for Radioactive Material Packages, NAC-STC, Certificate Number 9235, Revision 9. ERMS 546230. Nuclear Regulator Commission. Washington, D.C.

U. S. DOE (2006). RH 72-B Safety Analysis Report, Revision 4. United States Department of Energy.

Table 1 GTCC LLW and DOE GTCC-Like Other Waste Included in the Inventory for the GTCC LLW EIS[a]

Generator Site	Status	Waste Stream/Type	Waste Identifier	Packaged Volume (m^3)	Unpackaged Volume (m^3)
Stored CH Waste					
Commercial	Stored	CH Waste	Commercial 1	7.00	NG
Commercial	Stored	CH Waste	Commercial 2	32.00	NG
Commercial	Stored	CH Waste	Commercial 3	4.00	NG
			Subtotal	**43.00**	
BWXT	Stored	CH Waste		3.39	NG
			Subtotal	**3.39**	
INL	Stored	Other [Mixed TRU]	4430N-MLLW100	0.21	NG
INL	Stored	Other [Mixed TRU]	4430N-THCM103	0.21	NG
INL	Stored	Other [Mixed TRU]	4430N-THCM127	0.21	NG
INL	Stored	Other [Mixed TRU]	4430N-THCM130	0.21	NG
INL	Stored	Other [Mixed TRU]	4430N-THCM156	0.21	NG
INL	Stored	Other [Mixed TRU]	4430N-THCM167	0.21	NG
INL	Stored	Other [Mixed TRU]	4430N-THCM211	0.21	NG
INL	Stored	Other [Mixed TRU]	4430N-THCM233	0.21	NG
INL	Stored	Other [Mixed TRU]	4430N-THCM269	1.81	NG
INL	Stored	Other [Mixed TRU]	4430N-THCM280	1.81	NG
INL	Stored	Other [Mixed TRU]	4430N-THCM284	0.21	NG
INL	Stored	Other [Mixed TRU]	3138-10583	1.20	NG
INL	Stored	Other [Mixed TRU]	2948.R2-14622K	0.23	NG
INL	Stored	Other [Mixed TRU]	3138-17628K	2.55	NG
INL	Stored	Other [Mixed TRU]	3138-18438K	0.08	NG
INL	Stored	Other [Mixed TRU]	3138-18486K	0.02	NG
INL	Stored	Other [Mixed TRU]	3138-21664K	0.21	NG
INL	Stored	Other [Mixed TRU]	3138-21665K	0.32	NG
INL	Stored	Other [Mixed TRU]	3337.R1-22126K	0.21	NG

Table 1 GTCC LLW and DOE GTCC-Like Other Waste Included in the Inventory for the GTCC LLW EIS[a] (Continued)

Generator Site	Status	Waste Stream/Type	Waste Identifier	Packaged Volume (m^3)	Unpackaged Volume (m^3)
INL	Stored	Other [Mixed TRU]	3330.R2-22585K	0.32	NG
INL	Stored	Other [Mixed TRU]	1938N-6473	1.81	NG
INL	Stored	Other [Mixed TRU]	1938N-8177	0.51	NG
INL	Stored	Other [Mixed TRU]	3138-9806	1.20	NG
INL	Stored	Other [Mixed TRU]	1938N-DBR-0040	2.72	NG
INL	Stored	Other [Mixed TRU]	3138-DBR-0089	0.32	NG
INL	Stored	Other [Mixed TRU]	1938N-INTC000347	0.21	NG
INL	Stored	Other [Mixed TRU]	2460-NN-306002	0.04	NG
INL	Stored	Other [Mixed TRU]	2343N-TRA990105-02	0.02	NG
INL	Stored	Other [Mixed TRU-TRA]	4250N	1.46	NG
INL	Stored	Other [Mixed TRU-TRA]	4617N	0.21	NG
INL	Stored	Other [Mixed TRU-TRA]	2807N	0.21	NG
			Subtotal	**19.36**	
INL	Stored	Other [TRU]	ARMF/CRMF Capsules	0.42	0.00
			Subtotal	**0.42**	**0.00**
INL	Stored	Other (ROW)	Monsanto (IDC 530)	1.50	NG
INL	Stored	Other (ROW)	Monsanto (IDC 535)	3.40	NG
INL	Stored	Other (ROW)	Monsanto (IDC540)	12.70	NG
INL	Stored	Other (ROW)	Monsanto (IDC545)	1.50	NG
INL	Stored	Other (ROW)	J. Haynes (IDC 827)	0.42	NG
INL	Stored	Other (ROW)	Babcock & Wilcox (IDC515)	3.10	NG
INL	Stored	Other (ROW)	J. Haynes (IDC 826)	3.20	NG
INL	Stored	Other (ROW)	Bendix (IDC 111)	0.21	NG
INL	Stored	Other (ROW)	Mexico (IDC 142)	0.84	NG
INL	Stored	Other (ROW)	Mexico (IDC 142)	13.06	NG
			Subtotal	**39.93**	

Table 1 GTCC LLW and DOE GTCC-Like Other Waste Included in the Inventory for the GTCC LLW EIS[a] (Continued)

Generator Site	Status	Waste Stream/Type	Waste Identifier	Packaged Volume (m^3)	Unpackaged Volume (m^3)
WVDP	Stored	CH TRU	WV-M008, -M010, -T001, -T004, -T006, -T009, -T011, -T017, -M005, -M013, and -W024; and Product Purification Cell (part of WV-T020)	317.62	NG
WVDP	Stored	CH TRU	Other TRU	111.41	NG
			Subtotal	**429.02**	
			Total Stored CH Waste	**535.12**	
Stored RH Waste					
Commercial	Stored	RH Waste		33.00	NG
			Subtotal	**33.00**	
BWXT	Stored	RH Waste		14.48	NG
			Subtotal	**14.48**	
INL	Stored	Other [RH TRU]	3572T.R1	8.00	NG
			Subtotal	**8.00**	
BJOR	Stored	Other (Fuel/Flush Salts)	MSRE-Salts-RH	4.00	4.00
BJOR	Stored	RH Waste	MSRE-Uranium laden charcoal canister-RH	0.03	0.03
			Subtotal	**4.03**	**4.03**
ORNL	Stored	RH Waste	RH waste	11.17 [b]	8.40
ORNL	Stored	RH Waste	Scrap metal (RH)	18.75 [b]	14.10
ORNL	Stored	RH Waste	Scrap metal (RH)	1.73 [b]	1.30
ORNL	Stored	RH Waste	Process waste (RH)	93.37 [b]	70.20
ORNL	Stored	RH Waste	Process waste (RH)	7.18 [b]	5.40
ORNL	Stored	RH Waste	Irradiators (RH)	0.80 [b]	0.60
			Subtotal	**133.00**	**100.00**

Table 1 GTCC LLW and DOE GTCC-Like Other Waste Included in the Inventory for the GTCC LLW EIS[a] (Continued)

Generator Site	Status	Waste Stream/Type	Waste Identifier	Packaged Volume (m^3)	Unpackaged Volume (m^3)
WVDP	Stored	RH TRU	WV-M005, WV-M015, WV-T014, TRU Head End Cell and WTF (part of WV-T018), Vitrification Cell (part of WV-T016), and TRU Head End Cell	352.18	NG
WVDP	Stored	RH TRU	Other TRU	98.79	NG
			Subtotal	**450.98**	
			Total Stored RH Waste	**643.49**	
Projected CH Waste					
BWXT	Projected	CH TRU		0.60	NG
			Subtotal	**0.60**	
RPS	Projected	CH TRU		875.00	NG
			Subtotal	**875.00**	
WVDP	Projected	CH TRU	WV-T006, WV-T009, WV-T021, MPPB, 8D-1, 8D2&4	112.10	NG
WVDP	Projected	CH TRU	Process Plant D&D	424.56	NG
			Subtotal	**536.66**	
			Total Projected CH Waste	**1412.26**	
Projected RH Waste					
Commercial	Projected	RH TRU		1.00	NG
			Subtotal	**1.00**	
WVDP	Projected	RH TRU	Specific D&D Project: SDS Columns, 8D-1	113.28	NG
WVDP	Projected	RH TRU	Specific D&D Project: 8D-2 & 8D-4 (Waste Tank Farm – TRU)	189.74	NG
WVDP	Projected	RH TRU	Remote Handled Waste Facility Operations	35.00	NG
WVDP	Projected	RH TRU	Process Plant D&D	481.42	33
			Subtotal	**819.44**	

Table 1 GTCC LLW and DOE GTCC-Like Other Waste Included in the Inventory for the GTCC LLW EIS[a] (Continued)

Generator Site	Status	Waste Stream/Type	Waste Identifier	Packaged Volume (m^3)	Unpackaged Volume (m^3)
INL	Projected	Other [Mixed-TRA]	4607N	0.65[c]	0.21
			Subtotal	**0.65**	**0.21**
RPS	Projected	RH TRU		385.00	NG
			Subtotal	**385.00**	
			Total Projected RH Waste	**1206.09**	

[a]Data in this table is from or derived from information submitted by WVDP, INL, ORNL, and RPS in a DOE data call (Dixon 2006) and follow-up conference calls (Dixon 2007) and, (Bohan 2008). [b]A packaging factor of 1.33 was applied. [c]A packaging factor of 3.1 was applied.

Note: NG = Not Given

Table 2 WIPP Reference Activities for CH and RH Waste

Nuclide	Half-life (yr) [a]	CH (Ci) [a]	RH (Ci) [a]	CH (Ci/m^3) [b]	RH (Ci/m^3) [b]
Am-241	4.33E+02	4.75E+05	1.38E+04	2.82E+00	1.95E+00
Am-243	7.37E+03	7.78E+01	9.92E-01	4.62E-04	1.40E-04
C-14	5.72E+03	1.21E+00	1.21E+00	7.19E-06	1.71E-04
Cm-244	1.81E+01	6.17E+03	1.09E+03	3.66E-02	1.54E-01
Co-60	5.27E+00	9.83E-01	1.82E+03	5.83E-06	2.58E-01
Cs-137	3.01E+01	7.38E+03	4.26E+05	4.38E-02	6.02E+01
Fe-55	2.73E+00	0	1.33E-01	0	1.88E-05
Mn-54	8.55E-01	0	2.03E+00	0	2.87E-04
Mo-93	NG	NG	NG	NG	NG
Nb-94	NG	NG	NG	NG	NG
Ni-59	7.60E+04	7.64E-02	2.30E+01	4.54E-07	3.25E-03
Ni-63	1.01E+02	3.72E+00	1.12E+03	2.21E-05	1.58E-01
Np-237	2.14E+06	6.22E+00	6.70E-01	3.69E-05	9.47E-05
Pb-210	2.23E+01	1.89E+00	1.07E-06	1.12E-05	1.51E-10
Pu-238	8.77E+01	1.45E+06	3.81E+03	8.60E+00	5.38E-01
Pu-239	2.41E+04	5.78E+05	5.24E+03	3.43E+00	7.41E-01
Pu-240	6.56E+03	9.41E+04	1.58E+03	5.59E-01	2.24E-01
Pu-241	1.44E+01	1.96E+06	1.31E+05	1.16E+01	1.84E+01
Pu-242	3.75E+05	1.22E+01	4.79E-01	7.23E-05	6.77E-05
Sr-90	2.88E+01	5.61E+04	3.22E+05	3.33E-01	4.55E+01
Tc-99	2.13E+05	1.46E+02	1.59E+02	8.68E-04	2.25E-02
Th-229	7.30E+03	1.36E+00	1.85E-01	8.06E-06	2.61E-05
Th-230	7.54E+04	9.53E-02	1.88E-03	5.66E-07	2.65E-07
U-233	1.59E+05	1.10E+03	1.27E+02	6.53E-03	1.79E-02
U-235	7.04E+08	3.90E+00	1.09E+00	2.31E-05	1.54E-04

[a] Data taken from Leigh and Fox (2005), Table A-1; [b] Curies per cubic meter were calculated by dividing the curies for a nuclide by the total volume of WIPP CH or RH waste. Total WIPP CH volume is 1.68E+05 cubic meters, total WIPP RH volume is 7.08E+03 cubic meters (Leigh and Fox 2005).
NG = Not given

Table 3 GTCC LLW and DOE GTCC-Like Other Stored Waste Activity Summary[a]

Generator Site	Waste Identifier	Activity (Ci)							
		C-14	Mn-54	Fe-55	Ni-59	Co-60	Ni-63	Sr-90	Mo-93
Stored CH Waste									
Commercial		0	0	0	0	0	0	0	0
Commercial		0	0	0	0	0	0	0	0
Commercial		0	0	0	0	0	0	0	0
	Subtotal	**0**	**0**	**0**	**0**	**0**	**0**	**0**	**0**
BWXTb		2.44E-05	0	0	1.54E-06	1.98E-05	7.49E-05	1.13E+00	0
	Subtotal	**2.44E-05**	**0**	**0**	**1.54E-06**	**1.98E-05**	**7.49E-05**	**1.13E+00**	**0**
INL	4430N-MLLW100	0	0	0	5.50E-08	1.30E-07	6.10E-06	1.10E-03	0
INL	4430N-THCM103	0	0	0	4.70E-08	1.10E-07	5.20E-06	9.10E-04	0
INL	4430N-THCM127	0	0	0	7.80E-09	1.80E-08	8.60E-07	1.50E-04	0
INL	4430N-THCM130	0	0	0	4.70E-08	1.10E-07	5.20E-06	9.00E-04	0
INL	4430N-THCM156	0	0	0	8.00E-09	1.80E-08	8.90E-07	1.60E-04	0
INL	4430N-THCM167	0	0	0	9.50E-08	2.20E-07	1.10E-05	1.80E-03	0
INL	4430N-THCM211	0	0	0	8.10E-09	1.90E-08	9.00E-07	1.60E-04	0
INL	4430N-THCM233	0	0	0	7.80E-09	1.80E-08	8.60E-07	1.50E-04	0
INL	4430N-THCM269	0	0	0	3.70E-08	8.50E-08	4.10E-06	7.20E-04	0
INL	4430N-THCM280	0	0	0	3.30E-08	7.70E-08	3.70E-06	6.50E-04	0
INL	4430N-THCM284	0	0	0	7.90E-09	1.80E-08	8.80E-07	1.50E-04	0
INL	3138-10583	0	0	0	0	1.24E-02	5.23E-03	8.72E+00	0
INL	2948.R2-14622K	1.61E-07	0	1.25E-02	2.26E-04	2.26E-02	2.67E-02	7.64E-03	0
INL	3138-17628K	0	0	4.16E-03	4.16E-05	4.16E-03	4.16E-03	7.17E-01	0
INL	3138-18438K	1.19E-10	0	0	0	5.40E-05	3.24E-05	5.40E-02	0
INL	3138-18486K	5.78E-11	0	2.24E-04	2.24E-06	2.24E-04	2.24E-04	3.74E-02	0
INL	3138-21664K	0	0	0	0	2.24E-04	1.08E-04	1.87E-01	0
INL	3138-21665K	0	0	0	0	2.12E-05	6.43E-05	1.07E-01	0
INL	3337.R1-22126K	3.00E-08	0	1.40E-07	1.08E-07	5.00E-05	6.80E-06	7.86E-04	0
INL	3330.R2-22585K	0	0	0	0	3.89E-04	1.88E-04	3.24E-01	0
INL	1938N-6473	6.58E-09	0	0	0	2.54E-02	0	4.25E+00	0

Table 3 GTCC LLW and DOE GTCC-Like Other Stored Waste Activity Summary (Continued)

Generator Site	Waste Identifier	Activity (Ci)							
		C-14	Mn-54	Fe-55	Ni-59	Co-60	Ni-63	Sr-90	Mo-93
INL	1938N-8177	6.27E-10	0	0	0	2.42E-03	0	4.05E-01	0
INL	3138-9806	0	0	0	0	6.56E-03	0	1.10E+00	0
INL	1938N-DBR-0040	0	0	0	0	3.33E-03	7.00E-04	1.17E+00	0
INL	3138-DBR-0089	0	0	0	0	6.05E-04	3.63E-04	6.05E-01	0
INL	1938N-INTC000347	3.15E-09	0	0	0	1.43E-03	8.60E-04	1.43E+00	0
INL	2460-NN-306002	6.85E-07	1.28E-07	1.99E-05	0	2.76E-06	5.14E-06	1.43E-03	0
INL	2343N-TRA990105-02	0	0	0	0	6.42E-05	0	0	0
INL	4250N	0	0	0	0	1.36E-04	0	2.98E-02	0
INL	4617N	5.06E-07	0	9.43E-05	0	1.38E-03	8.00E-05	8.77E-03	0
INL	2807N	0	0	0	0	0	0	0	0
	Subtotal	**1.39E-06**	**1.28E-07**	**1.70E-02**	**2.70E-04**	**8.15E-02**	**3.88E-02**	**1.92E+01**	0
INL	ARMF/CRMF Capsules	0	0	0	0	5.20E-02	0	0	0
	Subtotal	**0**	**0**	**0**	**0**	**5.20E-02**	**0**	**0**	**0**
INL[b]	Monsanto (IDC 530)	1.08E-05	0	0	6.81E-07	8.75E-06	3.31E-05	5.00E-01	0
INL[b]	Monsanto (IDC 535)	2.44E-05	0	0	1.54E-06	1.98E-05	7.51E-05	1.13E+00	0
INL[b]	Monsanto (IDC540)	9.13E-05	0	0	5.76E-06	7.41E-05	2.80E-04	4.23E+00	0
INL[b]	Monsanto (IDC545)	1.08E-05	0	0	6.81E-07	8.75E-06	3.31E-05	5.00E-01	0
INL[b]	J. Haynes (IDC 827)	3.02E-06	0	0	1.91E-07	2.45E-06	9.28E-06	1.40E-01	0
INL[b]	Babcock & Wilcox (IDC515)	2.23E-05	0	0	1.41E-06	1.81E-05	6.85E-05	1.03E+00	0
INL[b]	J. Haynes (IDC 826)	2.30E-05	0	0	1.45E-06	1.87E-05	7.07E-05	1.07E+00	0
INL[b]	Bendix (IDC 111)	1.51E-06	0	0	9.53E-08	1.23E-06	4.64E-06	6.99E-02	0
INL[b]	Mexico (IDC 142)	6.04E-06	0	0	3.81E-07	4.90E-06	1.86E-05	2.80E-01	0

Table 3 GTCC LLW and DOE GTCC-Like Other Stored Waste Activity Summary (Continued)

		Activity (Ci)							
INL	Mexico (IDC 142)	9.38E-05	0	0	5.93E-06	7.62E-05	2.88E-04	4.35E+00	0
	Subtotal	**2.87E-04**	**0**	**0**	**1.81E-05**	**2.33E-04**	**8.82E-04**	**1.33E+01**	**0**
WVDP[c]	WV-M008, -M010, -T001, -T004, -T006, -T009, -T011, -T017, -M005, -M013, and -W024; and Product Purification Cell (part of WV-T020)	4.16E+03	6.65E+00	6.65E+03	0	2.35E+01	0	4.29E+03	0
WVDP[c]	Other TRU	1.46E+03	2.33E+00	2.33E+03	0	8.26E+00	0	1.51E+03	0
	Subtotal	**5.61E+03**	**8.98E+00**	**8.98E+03**	**0**	**3.18E+01**	**0**	**5.80E+03**	**0**
	Total Stored CH Waste	**5.61E+03**	**8.98E+00**	**8.98E+03**	**2.90E-04**	**3.19E+01**	**3.97E-02**	**5.83E+03**	**0**
Stored RH Waste									
Commercial		5.63E-03	9.45E-03	6.21E-04	1.07E-01	8.50E+00	5.22E+00	1.50E+03	0
	Subtotal	**5.63E-03**	**9.45E-03**	**6.21E-04**	**1.07E-01**	**8.50E+00**	**5.22E+00**	**1.50E+03**	**0**
BWXT[b]		2.47E-03	4.15E-03	2.73E-04	4.71E-02	3.73E+00	2.29E+00	6.59E+02	0
	Subtotal	**2.47E-03**	**4.15E-03**	**2.73E-04**	**4.71E-02**	**3.73E+00**	**2.29E+00**	**6.59E+02**	**0**
INL	3572T.R1	0	0	0	0	0	0	0	0
	Subtotal	**0**	**0**	**0**	**0**	**0**	**0**	**0**	**0**
BJOR	MSRE-Salts-RH	0	0	0	0	0	0	8.63E+00	0
BJOR	MSRE-Uranium laden charcoal canister-RH	0	0	0	0	0	0	6.40E-06	0
	Subtotal	**0**	**0**	**0**	**0**	**0**	**0**	**8.63E+00**	**0**
ORNL[d]	RH waste	0	0	0	0	0	0	0	0
ORNL[d]	Scrap metal (RH)	0	0	0	0	0	0	0	0
ORNL[d]	Scrap metal (RH)	0	0	0	0	0	0	0	0
ORNL[d]	Process waste (RH)	0	0	0	0	0	0	0	0
ORNL[d]	Process waste (RH)	0	0	0	0	0	0	0	0

Table 3 GTCC LLW and DOE GTCC-Like Other Stored Waste Activity Summary (Continued)

		Activity (Ci)							
ORNL[d]	Irradiators (RH)	0	4.80E+01	0	0	8.81E+02	0	3.67E+03	0
	Subtotal	**0**	**4.80E+01**	**0**	**0**	**8.81E+02**	**0**	**3.67E+03**	**0**
WVDP	WV-M005, WV-M015, WV-T014, TRU Head End Cell and WTF (part of WV-T018), Vitrification Cell (part of WV-T016), and TRU Head End Cell	5.55E+03	0	7.86E+03	9.01E+03	7.43E+04	5.78E+05	3.94E+05	0
WVDP	Other TRU	4.60E+02	0	6.50E+02	7.46E+02	6.15E+03	4.79E+04	3.27E+04	0
	Subtotal	**6.01E+03**	**0**	**8.51E+03**	**9.75E+03**	**8.04E+04**	**6.26E+05**	**4.27E+05**	**0**
	Total Stored RH Waste	**6.01E+03**	**4.80E+01**	**8.51E+03**	**9.75E+03**	**8.13E+04**	**6.26E+05**	**4.33E+05**	**0**

Table 3 GTCC LLW and DOE GTCC-Like Other Stored Waste Activity Summary (Continued)

Generator Site	Waste Identifier	Activity (Ci)							
		Nb-94	Tc-99	Cs-137	Pb-210	Th-229	Th-230	U-233	U-235
Stored CH Waste									
Commercial		0	0	1.00E-01	0	0	0	0	0
Commercial		0	0	1.00E-01	0	0	0	0	0
Commercial		0	0	8.00E+00	0	0	0	0	0
	Subtotal	**0**	**0**	**8.20E+00**	**0**	**0**	**0**	**0**	**0**
BWXT[b]		0	2.94E-03	1.48E-01	3.80E-05	2.73E-05	1.92E-06	2.21E-02	7.84E-05
	Subtotal	**0**	**2.94E-03**	**1.48E-01**	**3.80E-05**	**2.73E-05**	**1.92E-06**	**2.21E-02**	**7.84E-05**
INL	4430N-MLLW100	0	2.90E-07	1.20E-03	3.10E-06	2.20E-05	2.50E-03	5.00E-07	3.50E-05
INL	4430N-THCM103	0	2.40E-07	1.00E-03	1.30E-08	8.90E-08	1.00E-05	2.00E-08	1.40E-06
INL	4430N-THCM127	0	4.10E-08	1.70E-04	2.00E-09	1.40E-08	1.60E-06	1.60E-08	1.10E-06
INL	4430N-THCM130	0	2.40E-07	1.00E-03	3.80E-09	2.60E-08	3.00E-06	9.20E-09	6.40E-07
INL	4430N-THCM156	0	4.20E-08	1.70E-04	1.90E-08	1.30E-07	1.50E-05	2.20E-08	1.60E-06
INL	4430N-THCM167	0	5.00E-07	2.00E-03	1.10E-08	7.50E-08	8.50E-04	2.40E-08	1.60E-06
INL	4430N-THCM211	0	4.30E-08	1.80E-04	1.00E-07	7.00E-07	8.00E-05	1.60E-08	1.10E-06
INL	4430N-THCM233	0	4.10E-08	1.70E-04	2.00E-06	1.40E-05	1.60E-03	0	3.20E-08
INL	4430N-THCM269	0	1.90E-07	8.00E-04	1.10E-07	7.90E-07	9.10E-05	1.40E-07	9.70E-06
INL	4430N-THCM280	0	1.80E-07	7.20E-04	1.20E-07	8.50E-07	9.70E-05	5.90E-08	4.10E-06
INL	4430N-THCM284	0	4.20E-08	1.70E-04	3.30E-08	2.30E-07	2.60E-05	3.10E-07	2.20E-05
INL	3138-10583	1.83E-04	1.66E-03	8.72E+00	0	0	1.31E-07	0	3.40E-06
INL	2948.R2-14622K	4.40E-05	0	2.20E-02	0	1.75E-06	1.10E-06	9.94E-07	7.56E-07
INL	3138-17628K	2.22E-05	1.94E-04	7.17E-01	0	0	1.79E-08	0	4.09E-07
INL	3138-18438K	1.13E-06	1.03E-05	5.40E-02	0	0	8.10E-10	3.89E-11	2.11E-08
INL	3138-18486K	1.08E-11	7.32E-06	3.85E-02	5.01E-16	2.58E-15	9.25E-12	6.49E-14	1.73E-09
INL	3138-21664K	3.74E-06	3.37E-05	1.87E-01	0	0	2.62E-09	0	6.92E-08
INL	3138-21665K	2.25E-06	2.04E-05	1.07E-01	0	0	1.61E-09	0	4.18E-08
INL	3337.R1-22126K	0	0	4.04E-02	0	0	0	0	0
INL	3330.R2-22585K	6.48E-06	5.83E-05	3.24E-01	0	0	4.54E-09	0	1.20E-07
INL	1938N-6473	1.23E-06	8.33E-04	4.38E+00	0	0	1.05E-09	0	1.97E-07
INL	1938N-8177	1.17E-10	7.94E-05	4.18E-01	0	0	1.00E-10	0	1.88E-08

Table 3 GTCC LLW and DOE GTCC-Like Other Stored Waste Activity Summary (Continued)

Generator Site	Waste Identifier	Activity (Ci)							
		Nb-94	Tc-99	Cs-137	Pb-210	Th-229	Th-230	U-233	U-235
INL	3138-9806	3.17E-10	2.15E-04	1.13E+00	0	0	2.72E-10	0	5.09E-08
INL	1938N-DBR-0040	2.45E-05	2.22E-04	1.17E+00	0	0	1.75E-08	0	4.55E-07
INL	3138-DBR-0089	1.27E-05	1.15E-04	6.05E-01	0	0	9.08E-09	0	2.36E-07
INL	1938N-INTC000347	3.01E-05	2.72E-04	1.43E+00	0	0	4.43E-10	0	5.59E-07
INL	2460-NN-306002	0	5.69E-06	5.04E-03	0	0	1.60E-07	0	2.68E-06
INL	2343N-TRA990105-02	0	0	2.05E-02	0	0	0	0	0
INL	4250N	0	0	9.32E-03	0	0	0	3.77E-05	0
INL	4617N	0	0	2.64E-02	0	0	0	0	4.66E-08
INL	2807N	0	0	0	0	0	0	0	0
	Subtotal	**3.31E-04**	**3.73E-03**	**1.94E+01**	**5.51E-06**	**4.07E-05**	**5.28E-03**	**3.98E-05**	**8.73E-05**
INL	ARMF/CRMF Capsules	0	0	6.07E+01	0	0	0	6.14E+00	8.64E-05
	Subtotal	**0**	**0**	**6.07E+01**	**0**	**0**	**0**	**6.14E+00**	**8.64E-05**
INL[b]	Monsanto (IDC 530)	0	1.30E-03	6.57E-02	1.68E-05	1.21E-05	8.49E-07	9.80E-03	3.47E-05
INL[b]	Monsanto (IDC 535)	0	2.95E-03	1.49E-01	3.81E-05	2.74E-05	1.92E-06	2.22E-02	7.87E-05
INL[b]	Monsanto (IDC540)	0	1.10E-02	5.56E-01	1.42E-04	1.02E-04	7.18E-06	8.29E-02	2.94E-04
INL[b]	Monsanto (IDC545)	0	1.30E-03	6.57E-02	1.68E-05	1.21E-05	8.49E-07	9.80E-03	3.47E-05
INL[b]	J. Haynes (IDC 827)	0	3.64E-04	1.84E-02	4.71E-06	3.38E-06	2.38E-07	2.74E-03	9.72E-06
INL[b]	Babcock & Wilcox (IDC515)	0	2.69E-03	1.36E-01	3.47E-05	2.50E-05	1.75E-06	2.02E-02	7.17E-05
INL[b]	J. Haynes (IDC 826)	0	2.78E-03	1.40E-01	3.59E-05	2.58E-05	1.81E-06	2.09E-02	7.40E-05
INL[b]	Bendix (IDC 111)	0	1.82E-04	9.20E-03	2.35E-06	1.69E-06	1.19E-07	1.37E-03	4.86E-06
INL[b]	Mexico (IDC 142)	0	7.29E-04	3.68E-02	9.41E-06	6.77E-06	4.75E-07	5.49E-03	1.94E-05
INL	Mexico (IDC 142)	0	1.13E-02	5.72E-01	1.46E-04	1.05E-04	7.39E-06	8.53E-02	3.02E-04
	Subtotal	**0**	**3.47E-02**	**1.75E+00**	**4.48E-04**	**3.22E-04**	**2.26E-05**	**2.61E-01**	**9.24E-04**

Table 3 GTCC LLW and DOE GTCC-Like Other Stored Waste Activity Summary (Continued)

Generator Site	Waste Identifier	Activity (Ci)							
		Nb-94	Tc-99	Cs-137	Pb-210	Th-229	Th-230	U-233	U-235
WVDP[c]	WV-M008, -M010, -T001, -T004, -T006, -T009, -T011, -T017, -M005, -M013, and -W024; and Product Purification Cell (part of WV-T020)	0	1.56E+02	2.35E+03	0	6.93E+02	1.25E+02	4.78E+03	9.56E+00
WVDP[c]	Other TRU	0	5.47E+01	8.26E+02	0	2.43E+02	4.37E+01	1.68E+03	3.35E+00
	Subtotal	**0**	**2.11E+02**	**3.18E+03**	**0**	**9.36E+02**	**1.68E+02**	**6.46E+03**	**1.29E+01**
	Total Stored CH Waste	**3.31E-04**	**2.11E+02**	**3.27E+03**	**4.91E-04**	**9.36E+02**	**1.68E+02**	**6.46E+03**	**1.29E+01**
Stored RH Waste									
Commercial		0	7.43E-01	1.99E+03	4.99E-09	8.61E-04	8.75E-06	5.92E-01	5.10E-03
	Subtotal	**0**	**7.43E-01**	**1.99E+03**	**4.99E-09**	**8.61E-04**	**8.75E-06**	**5.92E-01**	**5.10E-03**
BWXT[b]		0	3.26E-01	8.72E+02	2.19E-09	3.78E-04	3.84E-06	2.60E-01	2.24E-03
	Subtotal	**0**	**3.26E-01**	**8.72E+02**	**2.19E-09**	**3.78E-04**	**3.84E-06**	**2.60E-01**	**2.24E-03**
INL	3572T.R1	0	0	0	0	0	0	0	0
	Subtotal	**0**	**0**	**0**	**0**	**0**	**0**	**0**	**0**
BJOR	MSRE-Salts-RH	0	0	7.12E+00	0	0	0	0	0
BJOR	MSRE-Uranium laden charcoal canister-RH	0	0	0	0	0	0	0	0
	Subtotal	**0**	**0**	**7.12E+00**	**0**	**0**	**0**	**0**	**0**
ORNL[d]	RH waste	0	0	0	0	0	0	0	0
ORNL[d]	Scrap metal (RH)	0	0	0	0	0	0	0	0
ORNL[d]	Scrap metal (RH)	0	0	0	0	0	0	0	0
ORNL[d]	Process waste (RH)	0	0	0	0	0	0	0	0
ORNL[d]	Process waste (RH)	0	0	0	0	0	0	0	0
ORNL[d]	Irradiators (RH)	0	2.00E+00	9.20E+03	0	0	0	7.75E+02	0
	Subtotal	**0**	**2.00E+00**	**9.20E+03**	0	0	0	**7.75E+02**	**0**

Table 3 GTCC LLW and DOE GTCC-Like Other Stored Waste Activity Summary (Continued)

Generator Site	Waste Identifier	Activity (Ci)							
		Nb-94	Tc-99	Cs-137	Pb-210	Th-229	Th-230	U-233	U-235
WVDP	WV-M005, WV-M015, WV-T014, TRU Head End Cell and WTF (part of WV-T018), Vitrification Cell (part of WV-T016), and TRU Head End Cell	5.55E+00	9.01E+03	3.29E+05	0	4.17E+00	1.53E+00	1.84E+02	1.46E+01
WVDP	Other TRU	4.60E-01	7.46E+02	2.72E+04	0	3.46E-01	1.26E-01	1.52E+01	1.21E+00
	Subtotal	**6.01E+00**	**9.75E+03**	**3.56E+05**	**0**	**4.52E+00**	**1.65E+00**	**1.99E+02**	**1.58E+01**
	Total Stored RH Waste	**6.01E+00**	**9.75E+03**	**3.68E+05**	**7.18E-09**	**4.52E+00**	**1.65E+00**	**9.75E+02**	**1.58E+01**

Table 3 GTCC LLW and DOE GTCC-Like Other Stored Waste Activity Summary (Continued)

Generator Site	Waste Identifier	Activity (Ci)								
		Np-237	Pu-238	Pu-239	Pu-240	Pu-241	Am-241	Pu-242	Am-243	Cm-244
Stored CH Waste										
Commercial		0	0	0	0	0	5.00E-02	0	0	0
Commercial		0	0	0	0	0	7.50E-02	0	0	0
Commercial		0	0	0	0	0	5.00E+00	0	0	0
	Subtotal	**0**	**0**	**0**	**0**	**0**	**5.13E+00**	**0**	**0**	**0**
BWXT[b]		1.25E-04	2.92E+01	1.16E+01	1.89E+00	3.94E+01	9.56E+00	2.45E-04	1.56E-03	1.24E-01
	Subtotal	**1.25E-04**	**2.92E+01**	**1.16E+01**	**1.89E+00**	**3.94E+01**	**9.56E+00**	**2.45E-04**	**1.56E-03**	**1.24E-01**
INL	4430N-MLLW100	5.70E-07	5.60E-01	6.20E-01	4.60E-03	4.60E+00	2.90E-01	0	0	0
INL	4430N-THCM103	2.40E-03	2.30E-03	2.50E-03	1.90E-05	1.90E-02	1.20E-03	0	0	0
INL	4430N-THCM127	3.70E-04	3.70E-04	4.00E-04	3.00E-06	3.00E-03	1.90E-04	0	0	0
INL	4430N-THCM130	7.00E-04	6.90E-04	7.50E-04	5.60E-06	5.60E-03	3.50E-04	0	0	0
INL	4430N-THCM156	3.60E-03	3.50E-03	3.80E-03	2.90E-05	2.90E-02	1.80E-03	0	0	0
INL	4430N-THCM167	2.00E-03	2.00E-03	2.10E-03	1.60E-05	1.60E-02	9.90E-04	0	0	0
INL	4430N-THCM211	1.90E-09	1.80E-02	2.00E-02	1.50E-04	1.50E-01	9.30E-03	0	0	0
INL	4430N-THCM233	3.70E-01	3.70E-01	4.00E-01	3.00E-03	3.00E+00	1.90E-01	0	0	0
INL	4430N-THCM269	2.10E-02	2.10E-02	2.30E-02	1.70E-04	1.70E-01	1.00E-02	0	0	0
INL	4430N-THCM280	2.20E-02	2.20E-02	2.40E-02	1.80E-04	1.80E-01	1.10E-02	0	0	0
INL	4430N-THCM284	6.00E-03	6.00E-03	6.50E-03	4.80E-05	4.90E-02	3.00E-03	0	0	0
INL	3138-10583	4.71E-04	6.28E-02	8.72E-03	1.66E-03	4.89E-02	7.94E-03	1.31E-06	3.49E-06	3.23E-04
INL	2948.R2-14622K	4.80E-06	7.07E-07	2.29E-06	1.57E-06	0	1.01E-03	2.18E-06		9.20E-10
INL	3138-17628K	5.67E-05	7.89E-03	1.08E-03	1.94E-04	9.32E-03	1.00E-03	2.08E-07	4.16E-07	2.08E-05
INL	3138-18438K	2.92E-06	3.89E-04	5.40E-05	1.03E-05	3.02E-04	4.91E-05	8.10E-09	2.16E-08	2.00E-06
INL	3138-18486K	2.12E-09	4.24E-04	5.40E-06	5.01E-06	5.01E-04	2.85E-05	1.12E-08	6.55E-13	3.70E-12
INL	3138-21664K	9.72E-06	1.31E-03	1.81E-04	3.37E-05	1.08E-03	1.61E-04	2.62E-08	7.11E-08	6.92E-06
INL	3138-21665K	5.79E-06	7.72E-04	1.07E-04	2.04E-05	6.00E-04	9.75E-05	1.61E-08	4.29E-08	3.96E-06
INL	3337.R1-22126K	0	8.86E-05	1.86E-04	1.86E-04	4.62E-03	8.92E-05	0	0	0
INL	3330.R2-22585K	1.68E-05	2.27E-03	3.14E-04	5.83E-05	1.88E-03	2.79E-04	4.54E-08	1.23E-07	1.20E-05
INL	1938N-6473	2.41E-07	4.82E-02	6.14E-04	5.70E-02	5.70E-04	3.24E-03	1.27E-06	0	0
INL	1938N-8177	2.30E-08	4.59E-03	5.85E-05	5.43E-05	5.43E-03	3.09E-04	1.21E-07	0	0

Table 3 GTCC LLW and DOE GTCC-Like Other Stored Waste Activity Summary (Continued)

Generator Site	Waste Identifier	Activity (Ci)								
		Np-237	Pu-238	Pu-239	Pu-240	Pu-241	Am-241	Pu-242	Am-243	Cm-244
INL	3138-9806	6.22E-08	1.24E-02	1.58E-04	1.47E-04	1.47E-02	8.37E-04	3.28E-07	0	0
INL	1938N-DBR-0040	6.30E-05	8.41E-03	1.17E-03	2.22E-04	6.54E-03	1.06E-03	1.75E-07	4.67E-07	4.32E-05
INL	3138-DBR-0089	3.27E-05	4.36E-03	6.05E-04	1.15E-04	3.39E-03	5.51E-04	9.08E-08	2.42E-07	2.24E-05
INL	1938N-INTC000347	7.74E-05	1.03E-02	1.43E-07	2.72E-04	8.03E-03	1.30E-03	2.15E-07	5.73E-07	5.30E-05
INL	2460-NN-306002	0	2.02E-03		1.63E-04	1.75E-03	1.45E-04	0	0	1.76E-06
INL	2343N-TRA990105-02	0	0	0	0	0	1.32E-02	0	0	0
INL	4250N	3.77E-05	3.37E-03	3.88E-04	3.88E-04	2.16E-01	3.37E-03	0	0	2.39E-04
INL	4617N	1.58E-07	1.71E-04	5.60E-05	5.60E-05	3.05E-03	4.93E-05	0	4.38E-06	1.11E-06
INL	2807N	2.10E-04	0	6.65E-04	0	0	1.50E-06	0	0	0
	Subtotal	**4.29E-01**	**1.18E+00**	**1.12E+00**	**6.88E-02**	**8.55E+00**	**5.53E-01**	**6.00E-06**	**9.83E-06**	**7.29E-04**
INL	ARMF/CRMF Capsules	0	0	0	0	0	1.27E+01	0	0	0
	Subtotal	**0**	**0**	**0**	**0**	**0**	**1.27E+01**	**0**	**0**	**0**
INL[b]	Monsanto (IDC 530)	5.54E-05	1.29E+01	5.14E+00	8.38E-01	1.75E+01	4.23E+00	1.08E-04	6.92E-04	5.49E-02
INL[b]	Monsanto (IDC 535)	1.26E-04	2.92E+01	1.17E+01	1.90E+00	3.96E+01	9.58E+00	2.46E-04	1.57E-03	1.25E-01
INL[b]	Monsanto (IDC540)	4.69E-04	1.09E+02	4.36E+01	7.09E+00	1.48E+02	3.58E+01	9.18E-04	5.86E-03	4.65E-01
INL[b]	Monsanto (IDC545)	5.54E-05	1.29E+01	5.14E+00	8.38E-01	1.75E+01	4.23E+00	1.08E-04	6.92E-04	5.49E-02
INL[b]	J. Haynes (IDC 827)	1.55E-05	3.61E+00	1.44E+00	2.35E-01	4.89E+00	1.18E+00	3.04E-05	1.94E-04	1.54E-02
INL[b]	Babcock & Wilcox (IDC515)	1.14E-04	2.67E+01	1.06E+01	1.73E+00	3.61E+01	8.74E+00	2.24E-04	1.43E-03	1.14E-01
INL[b]	J. Haynes (IDC 826)	1.18E-04	2.75E+01	1.10E+01	1.79E+00	3.72E+01	9.02E+00	2.31E-04	1.48E-03	1.17E-01
INL[b]	Bendix (IDC 111)	7.75E-06	1.81E+00	7.20E-01	1.17E-01	2.44E+00	5.92E-01	1.52E-05	9.69E-05	7.69E-03
INL[b]	Mexico (IDC 142)	3.10E-05	7.22E+00	2.88E+00	4.69E-01	9.77E+00	2.37E+00	6.07E-05	3.88E-04	3.08E-02
INL	Mexico (IDC 142)	4.82E-04	1.12E+02	4.48E+01	7.30E+00	1.52E+02	3.68E+01	9.44E-04	6.03E-03	4.78E-01
	Subtotal	**1.47E-03**	**3.43E+02**	**1.37E+02**	**2.23E+01**	**4.65E+02**	**1.13E+02**	**2.89E-03**	**1.84E-02**	**1.46E+00**

Table 3 GTCC LLW and DOE GTCC-Like Other Stored Waste Activity Summary (Continued)

Generator Site	Waste Identifier	Activity (Ci)								
		Np-237	Pu-238	Pu-239	Pu-240	Pu-241	Am-241	Pu-242	Am-243	Cm-244
WVDP[c]	WV-M008, -M010, -T001, -T004, -T006, -T009, -T011, -T017, -M005, -M013, and -W024; and Product Purification Cell (part of WV-T020)	1.52E+01	4.02E+05	2.77E+05	2.22E+05	6.51E+06	9.97E+05	1.39E+03	1.07E+04	7.34E+02
WVDP[c]	Other TRU	5.34E+00	1.41E+05	9.72E+04	7.77E+04	2.28E+06	3.50E+05	4.86E+02	3.74E+03	2.58E+02
	Subtotal	**2.06E+01**	**5.43E+05**	**3.74E+05**	**2.99E+05**	**8.79E+06**	**1.35E+06**	**1.87E+03**	**1.44E+04**	**9.92E+02**
	Total Stored CH Waste	**2.10E+01**	**5.43E+05**	**3.74E+05**	**2.99E+05**	**8.80E+06**	**1.35E+06**	**1.87E+03**	**1.44E+04**	**9.93E+02**
Stored RH Waste										
Commercial		3.12E-03	1.78E+01	2.44E+01	7.38E+00	6.09E+02	6.45E+01	2.23E-03	4.63E-03	5.08E+00
	Subtotal	**3.12E-03**	**1.78E+01**	**2.44E+01**	**7.38E+00**	**6.09E+02**	**6.45E+01**	**2.23E-03**	**4.63E-03**	**5.08E+00**
BWXT[b]		1.37E-03	7.79E+00	1.07E+01	3.24E+00	2.67E+02	2.83E+01	9.81E-04	2.03E-03	2.23E+00
	Subtotal	**1.37E-03**	**7.79E+00**	**1.07E+01**	**3.24E+00**	**2.67E+02**	**2.83E+01**	**9.81E-04**	**2.03E-03**	**2.23E+00**
INL	3572T.R1	0	0	0	0	0	8.72E+01	0	0	0
	Subtotal	**0**	**0**	**0**	**0**	**0**	**8.72E+01**	**0**	**0**	**0**
BJOR	MSRE-Salts-RH	0	2.01E+00	1.81E+01	7.02E+00	1.54E+01	2.02E+00	1.10E-03	0	0
BJOR	MSRE-Uranium laden charcoal canister-RH	0	1.22E-03	1.09E-02	4.16E-03	1.15E-03	0	0	0	0
	Subtotal	**0**	**2.01E+00**	**1.81E+01**	**7.03E+00**	**1.54E+01**	**2.02E+00**	**1.10E-03**	**0**	**0**
ORNL[d]	RH waste	0	0	0	0	0	0	0	0	0
ORNL[d]	Scrap metal (RH)	0	0	0	0	0	0	0	0	0
ORNL[d]	Scrap metal (RH)	0	0	0	0	0	0	0	0	0
ORNL[d]	Process waste (RH)	0	0	0	0	0	0	0	0	0
ORNL[d]	Process waste (RH)	0	0	0	0	0	0	0	0	0
ORNL[d]	Irradiators (RH)	0	7.39E+02	1.93E+02	3.10E+01	0	0	0	0	1.10E+03
	Subtotal	**0**	**7.39E+02**	**1.93E+02**	**3.10E+01**	**0**	**0**	**0**	**0**	**1.10E+03**

Table 3 GTCC LLW and DOE GTCC-Like Other Stored Waste Activity Summary (Continued)

Generator Site	Waste Identifier	Activity (Ci)								
		Np-237	Pu-238	Pu-239	Pu-240	Pu-241	Am-241	Pu-242	Am-243	Cm-244
WVDP	WV-M005, WV-M015, WV-T014, TRU Head End Cell and WTF (part of WV-T018), Vitrification Cell (part of WV-T016), and TRU Head End Cell	7.26E+01	1.12E+04	8.68E+04	6.57E+04	4.04E+05	7.95E+04	2.18E+02	4.86E+03	9.20E+02
WVDP	Other TRU	6.01E+00	9.31E+02	7.18E+03	5.44E+03	3.35E+04	6.58E+03	1.81E+01	4.03E+02	7.62E+01
	Subtotal	**7.87E+01**	**1.22E+04**	**9.40E+04**	**7.12E+04**	**4.38E+05**	**8.61E+04**	**2.36E+02**	**5.27E+03**	**9.97E+02**
	Total Stored RH Waste	**7.87E+01**	**1.29E+04**	**9.42E+04**	**7.12E+04**	**4.39E+05**	**8.63E+04**	**2.36E+02**	**5.27E+03**	**2.10E+03**

[a] Data in this table is from or derived from information submitted by WVDP, INL, ORNL, and RPS in a DOE data call (Dixon 2006) and follow-up conference calls Dixon (2007) and Bohan (2008).; [b] Activities calculated by multiplying the activities per m3 for a nuclide found in Table 2, by the waste stream volume. Nuclides not reported in Table 2, are assumed to be zero. ; [c] Activities based on updated waste stream profile forms provided by the site ; [d] ORNL did not provide activities for each waste stream. Activities are reported here in the Irradiator (RH) row, but actually represent the total activities of the five ORNL RH waste streams reported .Note: NG = Not Given

Table 4 GTCC LLW and DOE GTCC-Like Other Waste Activities at the Time Waste is Available for Disposal[a]

Generator Site	Waste Identifier	Activity (Ci)							
		C-14	Mn-54	Fe-55	Ni-59	Co-60	Ni-63	Sr-90	Mo-93
Stored CH Waste									
Commercial		0	0	0	0	0	0	0	0
Commercial		0	0	0	0	0	0	0	0
Commercial		0	0	0	0	0	0	0	0
	Subtotal	**0**	**0**	**0**	**0**	**0**	**0**	**0**	**0**
BWXTb		2.43E-05	0	0	1.54E-06	3.14E-06	6.80E-05	8.06E-01	0
	Subtotal	**2.43E-05**	**0**	**0**	**1.54E-06**	**3.14E-06**	**6.80E-05**	**8.06E-01**	**0**
INL	4430N-MLLW100	0	0	0	5.50E-08	2.06E-08	5.54E-06	7.85E-04	0
INL	4430N-THCM103	0	0	0	4.70E-08	1.75E-08	4.72E-06	6.50E-04	0
INL	4430N-THCM127	0	0	0	7.80E-09	2.86E-09	7.81E-07	1.07E-04	0
INL	4430N-THCM130	0	0	0	4.70E-08	1.75E-08	4.72E-06	6.43E-04	0
INL	4430N-THCM156	0	0	0	8.00E-09	2.86E-09	8.08E-07	1.14E-04	0
INL	4430N-THCM167	0	0	0	9.50E-08	3.49E-08	9.99E-06	1.29E-03	0
INL	4430N-THCM211	0	0	0	8.10E-09	3.01E-09	8.18E-07	1.14E-04	0
INL	4430N-THCM233	0	0	0	7.80E-09	2.86E-09	7.81E-07	1.07E-04	0
INL	4430N-THCM269	0	0	0	3.70E-08	1.35E-08	3.72E-06	5.14E-04	0
INL	4430N-THCM280	0	0	0	3.30E-08	1.22E-08	3.36E-06	4.64E-04	0
INL	4430N-THCM284	0	0	0	7.90E-09	2.86E-09	7.99E-07	1.07E-04	0
INL	3138-10583	0	0	0	0	1.97E-03	4.75E-03	6.23E+00	0
INL	2948.R2-14622K	1.61E-07	0	3.58E-04	2.26E-04	3.59E-03	2.43E-02	5.45E-03	0
INL	3138-17628K	0	0	1.19E-04	4.16E-05	6.60E-04	3.78E-03	5.12E-01	0
INL	3138-18438K	1.19E-10	0	0	0	8.57E-06	2.94E-05	3.86E-02	0
INL	3138-18486K	5.77E-11	0	6.41E-06	2.24E-06	3.55E-05	2.03E-04	2.67E-02	0
INL	3138-21664K	0	0	0	0	3.55E-05	9.81E-05	1.34E-01	0
INL	3138-21665K	0	0	0	0	3.36E-06	5.84E-05	7.64E-02	0
INL	3337.R1-22126K	2.99E-08	0	4.01E-09	1.08E-07	7.93E-06	6.18E-06	5.61E-04	0
INL	3330.R2-22585K	0	0	0	0	6.17E-05	1.71E-04	2.31E-01	0

Table 4 GTCC LLW and DOE GTCC-Like Other Waste Activities at the Time Waste is Available for Disposal (Continued)

Generator Site	Waste Identifier	Activity (Ci)							
		C-14	Mn-54	Fe-55	Ni-59	Co-60	Ni-63	Sr-90	Mo-93
INL	1938N-6473	6.57E-09	0	0	0	4.03E-03	0	3.03E+00	0
INL	1938N-8177	6.26E-10	0	0	0	3.84E-04	0	2.89E-01	0
INL	3138-9806	0	0	0	0	1.04E-03	0	7.85E-01	0
INL	1938N-DBR-0040	0	0	0	0	5.28E-04	6.36E-04	8.35E-01	0
INL	3138-DBR-0089	0	0	0	0	9.60E-05	3.30E-04	4.32E-01	0
INL	1938N-INTC000347	3.14E-09	0	0	0	2.27E-04	7.81E-04	1.02E+00	0
INL	2460-NN-306002	6.84E-07	1.51E-12	5.69E-07	0	4.38E-07	4.67E-06	1.02E-03	0
INL	2343N-TRA990105-02	0	0	0	0	1.02E-05	0	0	0
INL	4250N	0	0	0	0	2.16E-05	0	2.13E-02	0
INL	4617N	5.05E-07	0	2.70E-06	0	2.19E-04	7.27E-05	6.26E-03	0
INL	2807N	0	0	0	0	0	0	0	0
	Subtotal	**1.39E-06**	**1.51E-12**	**4.86E-04**	**2.70E-04**	**1.29E-02**	**3.52E-02**	**1.37E+01**	**0**
INL	ARMF/CRMF Capsules	0	0	0	0	8.25E-03	0	0	0
	Subtotal	**0**	**0**	**0**	**0**	**8.25E-03**	**0**	**0**	**0**
INLb	Monsanto (IDC 530)	1.08E-05	0	0	6.81E-07	1.39E-06	3.01E-05	3.57E-01	0
INLb	Monsanto (IDC 535)	2.44E-05	0	0	1.54E-06	3.15E-06	6.82E-05	8.08E-01	0
INLb	Monsanto (IDC540)	9.11E-05	0	0	5.76E-06	1.18E-05	2.55E-04	3.02E+00	0
INLb	Monsanto (IDC545)	1.08E-05	0	0	6.81E-07	1.39E-06	3.01E-05	3.57E-01	0
INLb	J. Haynes (IDC 827)	3.01E-06	0	0	1.91E-07	3.89E-07	8.43E-06	9.99E-02	0
INLb	Babcock & Wilcox (IDC515)	2.22E-05	0	0	1.41E-06	2.87E-06	6.22E-05	7.37E-01	0
INLb	J. Haynes (IDC 826)	2.30E-05	0	0	1.45E-06	2.96E-06	6.42E-05	7.61E-01	0
INLb	Bendix (IDC 111)	1.51E-06	0	0	9.53E-08	1.94E-07	4.21E-06	4.99E-02	0
INLb	Mexico (IDC 142)	6.03E-06	0	0	3.81E-07	7.78E-07	1.69E-05	2.00E-01	0
INL	Mexico (IDC 142)	9.37E-05	0	0	5.93E-06	1.21E-05	2.62E-04	3.11E+00	0
	Subtotal	**2.86E-04**	**0**	**0**	**1.81E-05**	**3.70E-05**	**8.01E-04**	**9.50E+00**	**0**

Table 4 GTCC LLW and DOE GTCC-Like Other Waste Activities at the Time Waste is Available for Disposal (Continued)

Generator Site	Waste Identifier	Activity (Ci)							
		C-14	Mn-54	Fe-55	Ni-59	Co-60	Ni-63	Sr-90	Mo-93
WVDPc	WV-M008, -M010, -T001, -T004, -T006, -T009, -T011, -T017, -M005, -M013, and -W024; and Product Purification Cell (part of WV-T020)	4.15E+03	7.85E-05	1.90E+02	0	3.74E+00	0	3.07E+03	0
WVDPc	Other TRU	1.46E+03	2.75E-05	6.67E+01	0	1.31E+00	0	1.08E+03	0
	Subtotal	**5.60E+03**	**1.06E-04**	**2.57E+02**	**0**	**5.05E+00**	**0**	**4.14E+03**	**0**
	Total Stored CH Waste	**5.60E+03**	**1.06E-04**	**2.57E+02**	**2.90E-04**	**5.07E+00**	**3.61E-02**	**4.17E+03**	**0**
Stored RH Waste									
Commercial		5.62E-03	1.12E-07	1.78E-05	1.07E-01	1.35E+00	4.74E+00	1.07E+03	0
	Subtotal	**5.62E-03**	**1.12E-07**	**1.78E-05**	**1.07E-01**	**1.35E+00**	**4.74E+00**	**1.07E+03**	**0**
BWXTb		2.47E-03	4.90E-08	7.80E-06	4.70E-02	5.92E-01	2.08E+00	4.70E+02	0
	Subtotal	**2.47E-03**	**4.90E-08**	**7.80E-06**	**4.70E-02**	**5.92E-01**	**2.08E+00**	**4.70E+02**	**0**
INL	3572T.R1	0	0	0	0	0	0	0	0
	Subtotal	**0**	**0**	**0**	**0**	**0**	**0**	**0**	**0**
BJOR	MSRE-Salts-RH	0	0	0	0	0	0	6.16E+00	0
BJOR	MSRE-Uranium laden charcoal canister-RH	0	0	0	0	0	0	4.57E-06	0
	Subtotal	**0**	**0**	**0**	**0**	**0**	**0**	**6.16E+00**	**0**
ORNLd	RH waste	0	0	0	0	0	0	0	0
ORNLd	Scrap metal (RH)	0	0	0	0	0	0	0	0
ORNLd	Scrap metal (RH)	0	0	0	0	0	0	0	0
ORNLd	Process waste (RH)	0	0	0	0	0	0	0	0
ORNLd	Process waste (RH)	0	0	0	0	0	0	0	0
ORNLd	Irradiators (RH)	0	5.66E-04	0	0	1.40E+02	0	2.62E+03	0
	Subtotal	**0**	**5.66E-04**	**0**	**0**	**1.40E+02**	**0**	**2.62E+03**	**0**

Table 4 GTCC LLW and DOE GTCC-Like Other Waste Activities at the Time Waste is Available for Disposal (Continued)

Generator Site	Waste Identifier	Activity (Ci)							
		C-14	Mn-54	Fe-55	Ni-59	Co-60	Ni-63	Sr-90	Mo-93
WVDP	WV-M005, WV-M015, WV-T014, TRU Head End Cell and WTF (part of WV-T018), Vitrification Cell (part of WV-T016), and TRU Head End Cell	5.55E+03	0	2.25E+02	9.00E+03	1.18E+04	5.26E+05	2.82E+05	0
WVDP	Other TRU	4.59E+02	0	1.86E+01	7.45E+02	9.76E+02	4.35E+04	2.33E+04	0
	Subtotal	**6.00E+03**	**0**	**2.43E+02**	**9.75E+03**	**1.28E+04**	**5.69E+05**	**3.05E+05**	**0**
	Total Stored RH Waste	**6.00E+03**	**5.67E-04**	**2.43E+02**	**9.75E+03**	**1.29E+04**	**5.69E+05**	**3.09E+05**	**0**
Projected CH Waste									
BWXTb		4.31E-06	0	0	2.72E-07	3.50E-06	1.33E-05	2.00E-01	0
	Subtotal	**4.31E-06**	**0**	**0**	**2.72E-07**	**3.50E-06**	**1.33E-05**	**2.00E-01**	**0**
RPS		0	0	0	0	0	0	0	0
	Subtotal	**0**	**0**	**0**	**0**	**0**	**0**	**0**	**0**
WVDP	WV-T006, WV-T009, WV-T021, MPPB, 8D-1, 8D2&4	1.47E+03	2.35E+00	2.35E+03	0	8.31E+00	0	1.52E+03	0
WVDP	Process Plant D&D	2.97E+03	4.74E+00	4.75E+03	2.34E+02	7.49E+01	6.79E+02	3.37E+03	0
	Subtotal	**4.44E+03**	**7.09E+00**	**7.10E+03**	**2.34E+02**	**8.32E+01**	**6.79E+02**	**4.89E+03**	**0**
	Total Projected CH Waste	**4.44E+03**	**7.09E+00**	**7.10E+03**	**2.34E+02**	**8.32E+01**	**6.79E+02**	**4.89E+03**	**0**
Projected RH Waste									
Commercial		1.71E-04	2.87E-04	1.88E-05	3.25E-03	2.58E-01	1.58E-01	4.55E+01	0
	Subtotal	**1.71E-04**	**2.87E-04**	**1.88E-05**	**3.25E-03**	**2.58E-01**	**1.58E-01**	**4.55E+01**	**0**
WVDP	Specific D&D Project: SDS Columns, 8D-1	7.80E-03	0	0	0	0	0	4.61E+02	0

Table 4 GTCC LLW and DOE GTCC-Like Other Waste Activities at the Time Waste is Available for Disposal (Continued)

Generator Site	Waste Identifier	Activity (Ci)							
		C-14	Mn-54	Fe-55	Ni-59	Co-60	Ni-63	Sr-90	Mo-93
WVDP	Specific D&D Project: 8D-2 & 8D-4 (Waste Tank Farm – TRU)	1.43E-03	0	0	0	0	0	4.40E+04	0
WVDP	Remote Handled Waste Facility Operations	3.90E+00	0	5.51E+00	6.32E+00	5.21E+01	4.06E+02	2.77E+02	0
WVDP	Process Plant D&D	2.76E+03	4.41E+00	0	0	1.56E+01	0	6.98E+03	0
	Subtotal	**2.76E+03**	**4.41E+00**	**5.51E+00**	**6.32E+00**	**6.77E+01**	**4.06E+02**	**5.17E+04**	**0**
INL	4607N	2.83E-03	5.41E-06	2.64E+02	1.56E+01	1.30E+02	1.51E+03	0	7.77E-03
	Subtotal	**2.83E-03**	**5.41E-06**	**2.64E+02**	**1.56E+01**	**1.30E+02**	**1.51E+03**	**0**	**7.77E-03**
RPS		0	0	0	0	0	0	2.22E+04	0
	Subtotal	**0**	**0**	**0**	**0**	**0**	**0**	**2.22E+04**	**0**
Total Projected RH Waste		**2.76E+03**	**4.41E+00**	**2.70E+02**	**2.19E+01**	**1.98E+02**	**1.92E+03**	**7.39E+04**	**7.77E-03**

Table 4 GTCC LLW and DOE GTCC-Like Other Waste Activities at the Time Waste is Available for Disposal (Continued)

Generator Site	Waste Identifier	Activity (Ci)							
		Nb-94	Tc-99	Cs-137	Pb-210	Th-229	Th-230	U-233	U-235
Stored CH Waste									
Commercial		0	0	7.24E-02	0	0	0	0	0
Commercial		0	0	7.24E-02	0	0	0	0	0
Commercial		0	0	5.80E+00	0	0	0	0	0
	Subtotal	**0**	**0**	**5.94E+00**	**0**	**0**	**0**	**0**	**0**
BWXTb		0	2.94E-03	1.08E-01	2.46E-05	2.73E-05	1.92E-06	2.21E-02	7.84E-05
	Subtotal	**0**	**2.94E-03**	**1.08E-01**	**2.46E-05**	**2.73E-05**	**1.92E-06**	**2.21E-02**	**7.84E-05**
INL	4430N-MLLW100	0	2.90E-07	8.69E-04	2.01E-06	2.20E-05	2.50E-03	5.00E-07	3.50E-05
INL	4430N-THCM103	0	2.40E-07	7.24E-04	8.41E-09	8.89E-08	1.00E-05	2.00E-08	1.40E-06
INL	4430N-THCM127	0	4.10E-08	1.23E-04	1.29E-09	1.40E-08	1.60E-06	1.60E-08	1.10E-06
INL	4430N-THCM130	0	2.40E-07	7.24E-04	2.46E-09	2.60E-08	3.00E-06	9.20E-09	6.40E-07
INL	4430N-THCM156	0	4.20E-08	1.23E-04	1.23E-08	1.30E-07	1.50E-05	2.20E-08	1.60E-06
INL	4430N-THCM167	0	5.00E-07	1.45E-03	7.12E-09	7.49E-08	8.50E-04	2.40E-08	1.60E-06
INL	4430N-THCM211	0	4.30E-08	1.30E-04	6.47E-08	6.99E-07	8.00E-05	1.60E-08	1.10E-06
INL	4430N-THCM233	0	4.10E-08	1.23E-04	1.29E-06	1.40E-05	1.60E-03	0	3.20E-08
INL	4430N-THCM269	0	1.90E-07	5.80E-04	7.12E-08	7.89E-07	9.10E-05	1.40E-07	9.70E-06
INL	4430N-THCM280	0	1.80E-07	5.22E-04	7.77E-08	8.49E-07	9.70E-05	5.90E-08	4.10E-06
INL	4430N-THCM284	0	4.20E-08	1.23E-04	2.14E-08	2.30E-07	2.60E-05	3.10E-07	2.20E-05
INL	3138-10583	1.83E-04	1.66E-03	6.32E+00	0	0	1.31E-07	0	3.40E-06
INL	2948.R2-14622K	4.40E-05	0	1.59E-02	0	1.75E-06	1.10E-06	9.94E-07	7.56E-07
INL	3138-17628K	2.22E-05	1.94E-04	5.19E-01	0	0	1.79E-08	0	4.09E-07
INL	3138-18438K	1.13E-06	1.03E-05	3.91E-02	0	0	8.10E-10	3.89E-11	2.11E-08
INL	3138-18486K	1.08E-11	7.32E-06	2.79E-02	3.24E-16	2.58E-15	9.25E-12	6.49E-14	1.73E-09
INL	3138-21664K	3.74E-06	3.37E-05	1.35E-01	0	0	2.62E-09	0	6.92E-08
INL	3138-21665K	2.25E-06	2.04E-05	7.75E-02	0	0	1.61E-09	0	4.18E-08
INL	3337.R1-22126K	0	0	2.93E-02	0	0	0	0	0
INL	3330.R2-22585K	6.48E-06	5.83E-05	2.35E-01	0	0	4.54E-09	0	1.20E-07
INL	1938N-6473	1.23E-06	8.33E-04	3.17E+00	0	0	1.05E-09	0	1.97E-07

Table 4 GTCC LLW and DOE GTCC-Like Other Waste Activities at the Time Waste is Available for Disposal (Continued)

Generator Site	Waste Identifier	Activity (Ci)							
		Nb-94	Tc-99	Cs-137	Pb-210	Th-229	Th-230	U-233	U-235
INL	1938N-8177	1.17E-10	7.94E-05	3.03E-01	0	0	1.00E-10	0	1.88E-08
INL	3138-9806	3.17E-10	2.15E-04	8.19E-01	0	0	2.72E-10	0	5.09E-08
INL	1938N-DBR-0040	2.45E-05	2.22E-04	8.48E-01	0	0	1.75E-08	0	4.55E-07
INL	3138-DBR-0089	1.27E-05	1.15E-04	4.38E-01	0	0	9.08E-09	0	2.36E-07
INL	1938N-INTC000347	3.01E-05	2.72E-04	1.04E+00	0	0	4.43E-10	0	5.59E-07
INL	2460-NN-306002	0	5.69E-06	3.65E-03	0	0	1.60E-07	0	2.68E-06
INL	2343N-TRA990105-02	0	0	1.49E-02	0	0	0	0	0
INL	4250N	0	0	6.75E-03	0	0	0	3.77E-05	0
INL	4617N	0	0	1.91E-02	0	0	0	0	4.66E-08
INL	2807N	0	0	0	0	0	0	0	0
	Subtotal	**3.31E-04**	**3.73E-03**	**1.41E+01**	**3.57E-06**	**4.06E-05**	**5.27E-03**	**3.98E-05**	**8.73E-05**
INL	ARMF/CRMF Capsules	0	0	4.39E+01	0	0	0	6.13E+00	8.64E-05
	Subtotal	**0**	**0**	**4.39E+01**	**0**	**0**	**0**	**6.13E+00**	**8.64E-05**
INLb	Monsanto (IDC 530)	0	1.30E-03	4.76E-02	1.09E-05	1.21E-05	8.48E-07	9.80E-03	3.47E-05
INLb	Monsanto (IDC 535)	0	2.95E-03	1.08E-01	2.47E-05	2.74E-05	1.92E-06	2.22E-02	7.87E-05
INLb	Monsanto (IDC540)	0	1.10E-02	4.03E-01	9.21E-05	1.02E-04	7.18E-06	8.29E-02	2.94E-04
INLb	Monsanto (IDC545)	0	1.30E-03	4.76E-02	1.09E-05	1.21E-05	8.48E-07	9.80E-03	3.47E-05
INLb	J. Haynes (IDC 827)	0	3.64E-04	1.33E-02	3.05E-06	3.38E-06	2.38E-07	2.74E-03	9.72E-06
INLb	Babcock & Wilcox (IDC515)	0	2.69E-03	9.84E-02	2.25E-05	2.49E-05	1.75E-06	2.02E-02	7.17E-05
INLb	J. Haynes (IDC 826)	0	2.78E-03	1.02E-01	2.32E-05	2.58E-05	1.81E-06	2.09E-02	7.40E-05
INLb	Bendix (IDC 111)	0	1.82E-04	6.66E-03	1.52E-06	1.69E-06	1.19E-07	1.37E-03	4.86E-06
INLb	Mexico (IDC 142)	0	7.29E-04	2.67E-02	6.09E-06	6.76E-06	4.75E-07	5.49E-03	1.94E-05
INL	Mexico (IDC 142)	0	1.13E-02	4.14E-01	9.47E-05	1.05E-04	7.39E-06	8.53E-02	3.02E-04
	Subtotal	**0**	**3.47E-02**	**1.27E+00**	**2.90E-04**	**3.21E-04**	**2.26E-05**	**2.61E-01**	**9.24E-04**

Table 4 GTCC LLW and DOE GTCC-Like Other Waste Activities at the Time Waste is Available for Disposal (Continued)

Generator Site	Waste Identifier	Activity (Ci)							
		Nb-94	Tc-99	Cs-137	Pb-210	Th-229	Th-230	U-233	U-235
WVDPc	WV-M008, -M010, -T001, -T004, -T006, -T009, -T011, -T017, -M005, -M013, and -W024; and Product Purification Cell (part of WV-T020)	0	1.56E+02	1.71E+03	0	6.92E+02	1.25E+02	4.78E+03	9.56E+00
WVDPc	Other TRU	0	5.47E+01	5.98E+02	0	2.43E+02	4.37E+01	1.68E+03	3.35E+00
	Subtotal	**0**	**2.10E+02**	**2.30E+03**	**0**	**9.34E+02**	**1.68E+02**	**6.46E+03**	**1.29E+01**
	Total Stored CH Waste	**3.31E-04**	**2.11E+02**	**2.37E+03**	**3.18E-04**	**9.34E+02**	**1.68E+02**	**6.46E+03**	**1.29E+01**
Stored RH Waste									
Commercial		0	7.43E-01	1.44E+03	3.23E-09	8.60E-04	8.75E-06	5.92E-01	5.10E-03
	Subtotal	**0**	**7.43E-01**	**1.44E+03**	**3.23E-09**	**8.60E-04**	**8.75E-06**	**5.92E-01**	**5.10E-03**
BWXTb		0	3.26E-01	6.31E+02	1.42E-09	3.77E-04	3.84E-06	2.60E-01	2.24E-03
	Subtotal	**0**	**3.26E-01**	**6.31E+02**	**1.42E-09**	**3.77E-04**	**3.84E-06**	**2.60E-01**	**2.24E-03**
INL	3572T.R1	0	0	0	0	0	0	0	0
	Subtotal	**0**	**0**	**0**	**0**	**0**	**0**	**0**	**0**
BJOR	MSRE-Salts-RH	0	0	5.16E+00	0	0	0	0	0
BJOR	MSRE-Uranium laden charcoal canister-RH	0	0	0	0	0	0	0	0
	Subtotal	**0**	**0**	**5.16E+00**	**0**	**0**	**0**	**0**	**0**
ORNLd	RH waste	0	0	0	0	0	0	0	0
ORNLd	Scrap metal (RH)	0	0	0	0	0	0	0	0
ORNLd	Scrap metal (RH)	0	0	0	0	0	0	0	0
ORNLd	Process waste (RH)	0	0	0	0	0	0	0	0
ORNLd	Process waste (RH)	0	0	0	0	0	0	0	0
ORNLd	Irradiators (RH)	0	2.00E+00	6.66E+03	0	0	0	7.75E+02	0
	Subtotal	**0**	**2.00E+00**	**6.66E+03**	**0**	**0**	**0**	**7.75E+02**	**0**

Table 4 GTCC LLW and DOE GTCC-Like Other Waste Activities at the Time Waste is Available for Disposal (Continued)

Generator Site	Waste Identifier	Activity (Ci)							
		Nb-94	Tc-99	Cs-137	Pb-210	Th-229	Th-230	U-233	U-235
WVDP	WV-M005, WV-M015, WV-T014, TRU Head End Cell and WTF (part of WV-T018), Vitrification Cell (part of WV-T016), and TRU Head End Cell	5.55E+00	9.01E+03	2.38E+05	0	4.17E+00	1.52E+00	1.84E+02	1.46E+01
WVDP	Other TRU	4.60E-01	7.46E+02	1.97E+04	0	3.45E-01	1.26E-01	1.52E+01	1.21E+00
	Subtotal	**6.01E+00**	**9.75E+03**	**2.58E+05**	**0**	**4.51E+00**	**1.65E+00**	**1.99E+02**	**1.58E+01**
	Total Stored RH Waste	**6.01E+00**	**9.75E+03**	**2.67E+05**	**4.64E-09**	**4.52E+00**	**1.65E+00**	**9.75E+02**	**1.58E+01**
Projected CH Waste									
BWXTb		0	5.21E-04	2.63E-02	6.72E-06	4.83E-06	3.39E-07	3.92E-03	1.39E-05
	Subtotal	**0**	**5.21E-04**	**2.63E-02**	**6.72E-06**	**4.83E-06**	**3.39E-07**	**3.92E-03**	**1.39E-05**
RPS		0	0	4.25E-07	0	0	0	0	0
	Subtotal	**0**	**0**	**4.25E-07**	**0**	**0**	**0**	**0**	**0**
WVDP	WV-T006, WV-T009, WV-T021, MPPB, 8D-1, 8D2&4	0	5.50E+01	8.31E+02	0	2.44E+02	4.40E+01	1.69E+03	3.37E+00
WVDP	Process Plant D&D	2.27E+02	1.18E+02	1.94E+03	0	4.94E+02	8.89E+01	3.41E+03	6.83E+00
	Subtotal	**2.27E+02**	**1.73E+02**	**2.77E+03**	**0**	**7.39E+02**	**1.33E+02**	**5.10E+03**	**1.02E+01**
	Total Projected CH Waste	**2.27E+02**	**1.73E+02**	**2.77E+03**	**6.72E-06**	**7.39E+02**	**1.33E+02**	**5.10E+03**	**1.02E+01**
Projected RH Waste									
Commercial		0	2.25E-02	6.02E+01	1.51E-10	2.61E-05	2.65E-07	1.79E-02	1.54E-04
	Subtotal	**0**	**2.25E-02**	**6.02E+01**	**1.51E-10**	**2.61E-05**	**2.65E-07**	**1.79E-02**	**1.54E-04**
WVDP	Specific D&D Project: SDS Columns, 8D-1	0	1.29E+00	2.45E+05	0	0	0	1.72E-02	2.40E-04

Table 4 GTCC LLW and DOE GTCC-Like Other Waste Activities at the Time Waste is Available for Disposal (Continued)

Generator Site	Waste Identifier	Activity (Ci)							
		Nb-94	Tc-99	Cs-137	Pb-210	Th-229	Th-230	U-233	U-235
WVDP	Specific D&D Project: 8D-2 & 8D-4 (Waste Tank Farm – TRU)	0	1.64E+00	7.88E+04	0	0	0	8.80E-02	1.33E-03
WVDP	Remote Handled Waste Facility Operations	3.90E-03	6.32E+00	2.31E+02	0	2.93E-03	1.07E-03	1.29E-01	1.02E-02
WVDP	Process Plant D&D	0	1.04E+02	2.43E+03	0	4.60E+02	8.28E+01	3.17E+03	6.35E+00
	Subtotal	**3.90E-03**	**1.13E+02**	**3.26E+05**	**0**	**4.60E+02**	**8.28E+01**	**3.17E+03**	**6.36E+00**
INL	4607N	1.93E-02	1.42E-03	0	0	0	0	0	0
	Subtotal	**1.93E-02**	**1.42E-03**	**0**	**0**	**0**	**0**	**0**	**0**
RPS		0	0	6.55E+04	0	0	0	0	0
	Subtotal	**0**	**0**	**6.55E+04**	**0**	**0**	**0**	**0**	**0**
	Total Projected RH Waste	**2.32E-02**	**1.13E+02**	**3.92E+05**	**1.51E-10**	**4.60E+02**	**8.28E+01**	**3.17E+03**	**6.36E+00**

Table 4 GTCC LLW and DOE GTCC-Like Other Waste Activities at the Time Waste is Available for Disposal (Continued)

Generator Site	Waste Identifier	Activity (Ci)								
		Np-237	Pu-238	Pu-239	Pu-240	Pu-241	Am-241	Pu-242	Am-243	Cm-244
Stored CH Waste										
Commercial		0	0	0	0	0	4.89E-02	0	0	0
Commercial		0	0	0	0	0	7.33E-02	0	0	0
Commercial		0	0	0	0	0	4.89E+00	0	0	0
	Subtotal	**0**	**0**	**0**	**0**	**0**	**5.01E+00**	**0**	**0**	**0**
BWXTb		1.25E-04	2.61E+01	1.16E+01	1.89E+00	2.01E+01	9.34E+00	2.45E-04	1.56E-03	7.26E-02
	Subtotal	**1.25E-04**	**2.61E+01**	**1.16E+01**	**1.89E+00**	**2.01E+01**	**9.34E+00**	**2.45E-04**	**1.56E-03**	**7.26E-02**
INL	4430N-MLLW100	5.70E-07	5.01E-01	6.20E-01	4.59E-03	2.35E+00	2.84E-01	0	0	0
INL	4430N-THCM103	2.40E-03	2.06E-03	2.50E-03	1.90E-05	9.69E-03	1.17E-03	0	0	0
INL	4430N-THCM127	3.70E-04	3.31E-04	4.00E-04	3.00E-06	1.53E-03	1.86E-04	0	0	0
INL	4430N-THCM130	7.00E-04	6.18E-04	7.50E-04	5.59E-06	2.85E-03	3.42E-04	0	0	0
INL	4430N-THCM156	3.60E-03	3.13E-03	3.80E-03	2.90E-05	1.48E-02	1.76E-03	0	0	0
INL	4430N-THCM167	2.00E-03	1.79E-03	2.10E-03	1.60E-05	8.16E-03	9.68E-04	0	0	0
INL	4430N-THCM211	1.90E-09	1.61E-02	2.00E-02	1.50E-04	7.65E-02	9.09E-03	0	0	0
INL	4430N-THCM233	3.70E-01	3.31E-01	4.00E-01	3.00E-03	1.53E+00	1.86E-01	0	0	0
INL	4430N-THCM269	2.10E-02	1.88E-02	2.30E-02	1.70E-04	8.67E-02	9.78E-03	0	0	0
INL	4430N-THCM280	2.20E-02	1.97E-02	2.40E-02	1.80E-04	9.18E-02	1.08E-02	0	0	0
INL	4430N-THCM284	6.00E-03	5.37E-03	6.50E-03	4.79E-05	2.50E-02	2.93E-03	0	0	0
INL	3138-10583	4.71E-04	5.62E-02	8.72E-03	1.66E-03	2.49E-02	7.76E-03	1.31E-06	3.49E-06	1.89E-04
INL	2948.R2-14622K	4.80E-06	6.33E-07	2.29E-06	1.57E-06	0	9.88E-04	2.18E-06	0	5.38E-10
INL	3138-17628K	5.67E-05	7.06E-03	1.08E-03	1.94E-04	4.75E-03	9.78E-04	2.08E-07	4.15E-07	1.22E-05
INL	3138-18438K	2.92E-06	3.48E-04	5.40E-05	1.03E-05	1.54E-04	4.80E-05	8.10E-09	2.16E-08	1.17E-06
INL	3138-18486K	2.12E-09	3.80E-04	5.40E-06	5.00E-06	2.55E-04	2.79E-05	1.12E-08	6.54E-13	2.16E-12
INL	3138-21664K	9.72E-06	1.17E-03	1.81E-04	3.37E-05	5.51E-04	1.57E-04	2.62E-08	7.10E-08	4.05E-06
INL	3138-21665K	5.79E-06	6.91E-04	1.07E-04	2.04E-05	3.06E-04	9.53E-05	1.61E-08	4.28E-08	2.32E-06
INL	3337.R1-22126K	0	7.93E-05	1.86E-04	1.86E-04	2.36E-03	8.72E-05	0	0	0
INL	3330.R2-22585K	1.68E-05	2.03E-03	3.14E-04	5.82E-05	9.58E-04	2.73E-04	4.54E-08	1.23E-07	7.02E-06
INL	1938N-6473	2.41E-07	4.32E-02	6.14E-04	5.69E-02	2.91E-04	3.17E-03	1.27E-06	0	0

Table 4 GTCC LLW and DOE GTCC-Like Other Waste Activities at the Time Waste is Available for Disposal (Continued)

Generator Site	Waste Identifier	Activity (Ci)								
		Np-237	Pu-238	Pu-239	Pu-240	Pu-241	Am-241	Pu-242	Am-243	Cm-244
INL	1938N-8177	2.30E-08	4.11E-03	5.85E-05	5.42E-05	2.77E-03	3.02E-04	1.21E-07	0	0
INL	3138-9806	6.22E-08	1.11E-02	1.58E-04	1.47E-04	7.49E-03	8.18E-04	3.28E-07	0	0
INL	1938N-DBR-0040	6.30E-05	7.53E-03	1.17E-03	2.22E-04	3.33E-03	1.04E-03	1.75E-07	4.66E-07	2.53E-05
INL	3138-DBR-0089	3.27E-05	3.90E-03	6.05E-04	1.15E-04	1.73E-03	5.39E-04	9.08E-08	2.42E-07	1.31E-05
INL	1938N-INTC000347	7.74E-05	9.22E-03	1.43E-07	2.72E-04	4.09E-03	1.27E-03	2.15E-07	5.72E-07	3.10E-05
INL	2460-NN-306002	0	1.81E-03	0	1.63E-04	8.92E-04	1.42E-04	0	0	1.03E-06
INL	2343N-TRA990105-02	0	0	0	0	0	1.29E-02	0	0	0
INL	4250N	3.77E-05	3.02E-03	3.88E-04	3.87E-04	1.10E-01	3.30E-03	0	0	1.40E-04
INL	4617N	1.58E-07	1.53E-04	5.60E-05	5.59E-05	1.55E-03	4.82E-05	0	4.37E-06	6.49E-07
INL	2807N	2.10E-04	0	6.65E-04	0	0	1.47E-06	0	0	0
	Subtotal	**4.29E-01**	**1.05E+00**	**1.12E+00**	**6.87E-02**	**4.36E+00**	**5.40E-01**	**6.00E-06**	**9.81E-06**	**4.27E-04**
INL	ARMF/CRMF Capsules	0	0	0	0	0	1.24E+01	0	0	0
	Subtotal	**0**	**0**	**0**	**0**	**0**	**1.24E+01**	**0**	**0**	**0**
INLb	Monsanto (IDC 530)	5.54E-05	1.15E+01	5.14E+00	8.37E-01	8.90E+00	4.13E+00	1.08E-04	6.91E-04	3.21E-02
INLb	Monsanto (IDC 535)	1.26E-04	2.62E+01	1.17E+01	1.90E+00	2.02E+01	9.37E+00	2.46E-04	1.57E-03	7.28E-02
INLb	Monsanto (IDC540)	4.69E-04	9.78E+01	4.35E+01	7.08E+00	7.53E+01	3.50E+01	9.18E-04	5.85E-03	2.72E-01
INLb	Monsanto (IDC545)	5.54E-05	1.15E+01	5.14E+00	8.37E-01	8.90E+00	4.13E+00	1.08E-04	6.91E-04	3.21E-02
INLb	J. Haynes (IDC 827)	1.55E-05	3.23E+00	1.44E+00	2.34E-01	2.49E+00	1.16E+00	3.04E-05	1.94E-04	9.00E-03
INLb	Babcock & Wilcox (IDC515)	1.14E-04	2.39E+01	1.06E+01	1.73E+00	1.84E+01	8.54E+00	2.24E-04	1.43E-03	6.64E-02
INLb	J. Haynes (IDC 826)	1.18E-04	2.46E+01	1.10E+01	1.78E+00	1.90E+01	8.82E+00	2.31E-04	1.48E-03	6.86E-02
INLb	Bendix (IDC 111)	7.75E-06	1.62E+00	7.20E-01	1.17E-01	1.25E+00	5.79E-01	1.52E-05	9.68E-05	4.50E-03
INLb	Mexico (IDC 142)	3.10E-05	6.47E+00	2.88E+00	4.69E-01	4.98E+00	2.32E+00	6.07E-05	3.87E-04	1.80E-02
INL	Mexico (IDC 142)	4.82E-04	1.01E+02	4.48E+01	7.28E+00	7.75E+01	3.60E+01	9.44E-04	6.02E-03	2.80E-01
	Subtotal	**1.47E-03**	**3.07E+02**	**1.37E+02**	**2.23E+01**	**2.37E+02**	**1.10E+02**	**2.89E-03**	**1.84E-02**	**8.56E-01**

Table 4 GTCC LLW and DOE GTCC-Like Other Waste Activities at the Time Waste is Available for Disposal (Continued)

Generator Site	Waste Identifier	Activity (Ci)								
		Np-237	Pu-238	Pu-239	Pu-240	Pu-241	Am-241	Pu-242	Am-243	Cm-244
WVDPc	WV-M008, -M010, -T001, -T004, -T006, -T009, -T011, -T017, -M005, -M013, and -W024; and Product Purification Cell (part of WV-T020)	1.52E+01	3.60E+05	2.77E+05	2.21E+05	3.32E+06	9.75E+05	1.39E+03	1.07E+04	4.30E+02
WVDPc	Other TRU	5.34E+00	1.26E+05	9.71E+04	7.76E+04	1.16E+06	3.42E+05	4.86E+02	3.74E+03	1.51E+02
	Subtotal	**2.06E+01**	**4.86E+05**	**3.74E+05**	**2.99E+05**	**4.48E+06**	**1.32E+06**	**1.87E+03**	**1.44E+04**	**5.80E+02**
	Total Stored CH Waste	**2.10E+01**	**4.86E+05**	**3.74E+05**	**2.99E+05**	**4.48E+06**	**1.32E+06**	**1.87E+03**	**1.44E+04**	**5.81E+02**
Stored RH Waste										
Commercial		3.12E-03	1.59E+01	2.44E+01	7.37E+00	3.10E+02	6.31E+01	2.23E-03	4.62E-03	2.97E+00
	Subtotal	**3.12E-03**	**1.59E+01**	**2.44E+01**	**7.37E+00**	**3.10E+02**	**6.31E+01**	**2.23E-03**	**4.62E-03**	**2.97E+00**
BWXTb		1.37E-03	6.98E+00	1.07E+01	3.23E+00	1.36E+02	2.77E+01	9.81E-04	2.03E-03	1.30E+00
	Subtotal	**1.37E-03**	**6.98E+00**	**1.07E+01**	**3.23E+00**	**1.36E+02**	**2.77E+01**	**9.81E-04**	**2.03E-03**	**1.30E+00**
INL	3572T.R1	0	0	0	0	0	8.52E+01	0	0	0
	Subtotal	**0**	**0**	**0**	**0**	**0**	**8.52E+01**	**0**	**0**	**0**
BJOR	MSRE-Salts-RH	0	1.80E+00	1.81E+01	7.01E+00	7.84E+00	1.98E+00	1.10E-03	0	0
BJOR	MSRE-Uranium laden charcoal canister-RH	0	1.09E-03	1.09E-02	4.15E-03	5.86E-04	0	0	0	0
	Subtotal	**0**	**1.80E+00**	**1.81E+01**	**7.02E+00**	**7.84E+00**	**1.98E+00**	**1.10E-03**	**0**	**0**
ORNLd	RH waste	0	0	0	0	0	0	0	0	0
ORNLd	Scrap metal (RH)	0	0	0	0	0	0	0	0	0
ORNLd	Scrap metal (RH)	0	0	0	0	0	0	0	0	0
ORNLd	Process waste (RH)	0	0	0	0	0	0	0	0	0
ORNLd	Process waste (RH)	0	0	0	0	0	0	0	0	0
ORNLd	Irradiators (RH)	0	6.62E+02	1.93E+02	3.10E+01	0	0	0	0	6.42E+02
	Subtotal	**0**	**6.62E+02**	**1.93E+02**	**3.10E+01**	**0**	**0**	**0**	**0**	**6.42E+02**

Table 4 GTCC LLW and DOE GTCC-Like Other Waste Activities at the Time Waste is Available for Disposal (Continued)

Generator Site	Waste Identifier	Activity (Ci)								
		Np-237	Pu-238	Pu-239	Pu-240	Pu-241	Am-241	Pu-242	Am-243	Cm-244
WVDP	WV-M005, WV-M015, WV-T014, TRU Head End Cell and WTF (part of WV-T018), Vitrification Cell (part of WV-T016), and TRU Head End Cell	7.26E+01	1.01E+04	8.67E+04	6.56E+04	2.06E+05	7.78E+04	2.18E+02	4.86E+03	5.38E+02
WVDP	Other TRU	6.01E+00	8.33E+02	7.18E+03	5.43E+03	1.71E+04	6.44E+03	1.81E+01	4.02E+02	4.46E+01
	Subtotal	**7.87E+01**	**1.09E+04**	**9.39E+04**	**7.11E+04**	**2.23E+05**	**8.42E+04**	**2.36E+02**	**5.26E+03**	**5.83E+02**
	Total Stored RH Waste	**7.87E+01**	**1.16E+04**	**9.42E+04**	**7.11E+04**	**2.24E+05**	**8.44E+04**	**2.36E+02**	**5.26E+03**	**1.23E+03**
				Projected CH Waste						
BWXTb		2.22E-05	5.16E+00	2.06E+00	3.35E-01	6.98E+00	1.69E+00	4.34E-05	2.77E-04	2.20E-02
	Subtotal	**2.22E-05**	**5.16E+00**	**2.06E+00**	**3.35E-01**	**6.98E+00**	**1.69E+00**	**4.34E-05**	**2.77E-04**	**2.20E-02**
RPS		0	2.03E+01	4.21E+01	1.65E+01	4.17E+02	3.68E+01	0	0	0
	Subtotal	**0**	**2.03E+01**	**4.21E+01**	**1.65E+01**	**4.17E+02**	**3.68E+01**	**0**	**0**	**0**
WVDP	WV-T006, WV-T009, WV-T021, MPPB, 8D-1, 8D2&4	5.38E+00	1.42E+05	9.78E+04	7.82E+04	2.30E+06	3.52E+05	4.89E+02	3.76E+03	2.59E+02
WVDP	Process Plant D&D	1.09E+01	2.87E+05	1.98E+05	1.58E+05	4.64E+06	7.12E+05	9.88E+02	7.61E+03	5.24E+02
	Subtotal	**1.63E+01**	**4.28E+05**	**2.95E+05**	**2.36E+05**	**6.94E+06**	**1.06E+06**	**1.48E+03**	**1.14E+04**	**7.84E+02**
	Total Projected CH Waste	**1.63E+01**	**4.28E+05**	**2.96E+05**	**2.36E+05**	**6.94E+06**	**1.06E+06**	**1.48E+03**	**1.14E+04**	**7.84E+02**
				Projected RH Waste						
Commercial		9.47E-05	5.38E-01	7.41E-01	2.24E-01	1.84E+01	1.95E+00	6.77E-05	1.40E-04	1.54E-01
	Subtotal	**9.47E-05**	**5.38E-01**	**7.41E-01**	**2.24E-01**	**1.84E+01**	**1.95E+00**	**6.77E-05**	**1.40E-04**	**1.54E-01**
WVDP	Specific D&D Project: SDS Columns, 8D-1	2.60E-03	6.46E-01	1.78E-01	1.26E-01	5.18E+00	1.31E-01	0	0	2.02E-02

Table 4 GTCC LLW and DOE GTCC-Like Other Waste Activities at the Time Waste is Available for Disposal (Continued)

Generator Site	Waste Identifier	Activity (Ci)								
		Np-237	Pu-238	Pu-239	Pu-240	Pu-241	Am-241	Pu-242	Am-243	Cm-244
WVDP	Specific D&D Project: 8D-2 & 8D-4 (Waste Tank Farm – TRU)	5.93E-01	1.64E+02	4.09E+01	2.97E+01	8.80E+02	4.30E+02	0	0	8.90E+01
WVDP	Remote Handled Waste Facility Operations	5.09E-02	7.88E+00	6.09E+01	4.61E+01	2.84E+02	5.58E+01	1.53E-01	3.41E+00	6.45E-01
WVDP	Process Plant D&D	1.02E+01	2.67E+05	1.84E+05	1.47E+05	4.32E+06	6.62E+05	9.20E+02	7.08E+03	4.96E+02
	Subtotal	**1.08E+01**	**2.67E+05**	**1.84E+05**	**1.47E+05**	**4.32E+06**	**6.63E+05**	**9.20E+02**	**7.08E+03**	**5.86E+02**
INL	4607N	0	0	0	0	0	0	0	0	0
	Subtotal	**0**	**0**	**0**	**0**	**0**	**0**	**0**	**0**	**0**
RPS		5.68E+00	3.00E+03	1.61E+00	6.88E-01	1.49E+02	3.92E+01	0	0	0
	Subtotal	**5.68E+00**	**3.00E+03**	**1.61E+00**	**6.88E-01**	**1.49E+02**	**3.92E+01**	**0**	**0**	**0**
	Total Projected RH Waste	**1.65E+01**	**2.70E+05**	**1.84E+05**	**1.47E+05**	**4.32E+06**	**6.63E+05**	**9.20E+02**	**7.08E+03**	**5.86E+02**

[a] Data in this table is from or derived from information submitted by WVDP, INL, ORNL, and RPS in a DOE data call (Dixon 2006) and follow-up conference calls (Dixon 2007); [b] Activities calculated by multiplying the activities per m3 for a nuclide found in Table 2, by the waste stream volume. Nuclides not reported in Table 2, are assumed to be zero; [c] Activities based on updated waste stream profile forms provided by WVDP; [d] ORNL did not provide activities for each waste stream. Activities are reported here in the Irradiator (RH) row, but actually represent the total activities of the five ORNL RH waste streams reported,

Note: NG = Not Given

Table 5 GTCC LLW and DOE GTCC-Like Other Waste Volumes and Containers

Owner	Description	Stored Packaged Volume (m^3)	Projected Packaged Volume (m^3)	Number of 55-gallon drums	Number of SWBs	Number of RH Canisters	Number of AMCs	Number of TADs[a]
Stored CH Waste								
Commercial	Am-241,Cs-137	7.00		34	NA	NA	12	4
Commercial	Am-241,Cs-137, Co-60	32.00		154	NA	NA	52	18
Commercial	Am-241,Cs-137	4.00		20	NA	NA	7	3
Commercial	**Subtotal**	**43.00**		**208**	NA	NA	**71**	**25**
BWXT	Transuranic-contaminated waste	3.39		17	NA	NA	6	2
INL	Other (31 mixed transuranic items)	19.36		94	NA	NA	32	11
INL	Other (transuranic)	0.42		3	NA	NA	1	1
INL	Other (10 radioactive only waste items)	39.93		192	NA	NA	64	22
WVDP	TRU waste	317.62		NA	169	NA	NA	85
WVDP	Other TRU waste	111.41		NA	60	NA	NA	30
DOE	**Subtotal**	**492.12**		**306**	**229**	NA	**103**	**151**
	Total CH Stored	**535.12**		**514**	**229**	NA	**174**	**176**
Stored RH Waste								
Commercial	Misc TRU	33.00		159	NA	53	NA	18
Commercial	**Subtotal**	**33.00**		**159**	NA	**53**	NA	**18**
BWXT	Transuranic-contaminated waste	14.48		70	NA	24	NA	8
INL	Other (remote handled transuranic)	8.00		39	NA	13	NA	5
BJOR	RH Fuel flush salts from Molten Salt Reactor Experiment (MSRE) (10 salt cans)	4.00		20	NA	7	NA	3
BJOR	Uranium laden charcoal canister from MSRE	0.03		1	NA	1	NA	1

Table 5 GTCC LLW and DOE GTCC-Like Other Waste Volumes and Containers (Continued)

Owner	Description	Stored Packaged Volume (m^3)	Projected Packaged Volume (m^3)	Number of 55-gallon drums	Number of SWBs	Number of RH Canisters	Number of AMCs	Number of TADs[a]
ORNL	RH waste	11.17		54	NA	18	NA	6
ORNL	Scrap metal (RH)	18.75		91	NA	31	NA	11
ORNL	Scrap metal (RH)	1.73		9	NA	3	NA	1
ORNL	Process waste (RH)	93.37		449	NA	150	NA	50
ORNL	Process waste (RH)	7.18		35	NA	12	NA	4
ORNL	Irradiators (RH)	0.80		4	NA	2	NA	1
WVDP	TRU waste	352.18		1694	NA	565	NA	189
WVDP	Other TRU waste	98.79		475	NA	159	NA	53
DOE	**Subtotal**	**610.49**		**2941**	NA	**985**	NA	**332**
	Total RH Stored	**643.49**		**3100**	NA	**1038**	NA	**350**
Projected CH Waste								
BWXT	Potentially non-defense TRU from maintenance activities		0.60	3	NA	NA	1	1
RPS	Contact handled and remote handled TRU from proposed RPS operations, including target fabrication and plutonium purification		875.00	4207	NA	NA	1403	468
WVDP	TRU waste		112.10	539	NA	NA	180	60
WVDP	Process Plant D&D		424.56	2042	NA	NA	681	227
DOE	**Subtotal**		**1412.26**	**6791**	NA	NA	**2265**	**756**
	Total CH Projected		**1412.26**	**6791**	NA	**NA**	**2265**	**756**
Projected RH Waste								
Commercial	Misc TRU		1.00	5	NA	2	NA	1
Commercial	**Subtotal**		**1.00**	**5**	NA	**2**	NA	**1**
WVDP	Specific D&D Project: SDS Columns, 8D-1		113.28	545	NA	182	NA	61
WVDP	Specific D&D Project: 8D-2 & 8D-4 (Waste Tank Farm – TRU)		189.74	913	NA	305	NA	102

Table 5 GTCC LLW and DOE GTCC-Like Other Waste Volumes and Containers (Continued)

Owner	Description	Stored Packaged Volume (m^3)	Projected Packaged Volume (m^3)	Number of 55-gallon drums	Number of SWBs	Number of RH Canisters	Number of AMCs	Number of TADs[a]
WVDP	Remote Handled Waste Facility Operations		35.00	169	NA	57	NA	19
WVDP	Process Plant D&D		481.42	2315	NA	772	NA	258
INL	Other [Various] – (Solid)		0.65	4	NA	2	NA	1
RPS	Contact handled and remote handled TRU from proposed RPS operations, including target fabrication and plutonium purification		385.00	1851	NA	617	NA	206
DOE	**Subtotal**		**1205.09**	**5797**	NA	**1935**	NA	**647**
	Total RH Projected		**1206.09**	**5802**	NA	**1937**	NA	**648**

Table 5 GTCC LLW and DOE GTCC-Like Other Waste Volumes and Containers (Continued)

Owner	Description	Number of NAC-STCs (1 TAD per Cask[a])	Number of 7-packs	Number of TRUPACTS	Number of TRUPACT Shipments	Number of CNS8-120B Shipments	Number of RH-72B Shipments
Stored CH Waste							
Commercial	Am-241,Cs-137	4	5	3	1	9	NA
Commercial	Am-241,Cs-137, Co-60	18	22	11	4	39	NA
Commercial	Am-241,Cs-137	3	3	2	1	5	NA
Commercial	**Subtotal**	**25**	**30**	**16**	**6**	**53**	NA
BWXT	Transuranic-contaminated waste	2	3	2	1	5	NA
INL	Other (31 mixed transuranic items)	11	14	7	3	24	NA
INL	Other (transuranic)	1	1	1	1	1	NA
INL	Other (10 radioactive only waste items)	22	28	14	5	48	NA
WVDP	TRU waste	85	NA	85	29	169	NA
WVDP	Other TRU waste	30	NA	30	10	60	NA
DOE	**Subtotal**	**151**	**46**	**139**	**49**	**307**	NA
	Total CH Stored	**176**	**76**	**155**	**55**	**360**	NA
Stored RH Waste							
Commercial	Misc TRU	18	NA	NA	NA	NA	53
Commercial	**Subtotal**	**18**	NA	NA	NA	NA	**53**
BWXT	Transuranic-contaminated waste	8	NA	NA	NA	NA	24
INL	Other (remote handled transuranic)	5	NA	NA	NA	NA	13
BJOR	RH Fuel flush salts from Molten Salt Reactor Experiment (MSRE) (10 salt cans)	3	NA	NA	NA	NA	7
BJOR	Uranium laden charcoal canister from MSRE	1	NA	NA	NA	NA	1
ORNL	RH waste	6	NA	NA	NA	NA	18
ORNL	Scrap metal (RH)	11	NA	NA	NA	NA	31

Table 5 GTCC LLW and DOE GTCC-Like Other Waste Volumes and Containers (Continued)

Owner	Description	Number of NAC-STCs (1 TAD per Cask[a])	Number of 7-packs	Number of TRUPACTS	Number of TRUPACT Shipments	Number of CNS8-120B Shipments	Number of RH-72B Shipments
ORNL	Scrap metal (RH)	1	NA	NA	NA	NA	3
ORNL	Process waste (RH)	50	NA	NA	NA	NA	150
ORNL	Process waste (RH)	4	NA	NA	NA	NA	12
ORNL	Irradiators (RH)	1	NA	NA	NA	NA	2
WVDP	TRU waste	189	NA	NA	NA	NA	565
WVDP	Other TRU waste	53	NA	NA	NA	NA	159
DOE	**Subtotal**	**332**	NA	NA	NA	NA	**985**
	Total RH Stored	**350**	NA	NA	NA	NA	**1038**
Projected CH Waste							
BWXT	Potentially non-defense TRU from maintenance activities	1	1	1	1	1	NA
RPS	Contact handled and remote handled TRU from proposed RPS operations, including target fabrication and plutonium purification	468	601	301	101	1052	NA
WVDP	TRU waste	60	77	39	13	135	NA
WVDP	Process Plant D&D	227	292	146	49	511	NA
DOE	**Subtotal**	**756**	**971**	**487**	**164**	**1699**	NA
	Total CH Projected	**756**	**971**	**487**	**164**	**1699**	NA
Projected RH Waste							
Commercial	Misc TRU	1	NA	NA	NA	NA	2
Commercial	**Subtotal**	**1**	NA	NA	NA	NA	**2**
WVDP	Specific D&D Project: SDS Columns, 8D-1	61	NA	NA	NA	NA	182
WVDP	Specific D&D Project: 8D-2 & 8D-4 (Waste Tank Farm – TRU)	102	NA	NA	NA	NA	305
WVDP	Remote Handled Waste Facility Operations	19	NA	NA	NA	NA	57

Table 5 GTCC LLW and DOE GTCC-Like Other Waste Volumes and Containers (Continued)

Owner	Description	Number of NAC-STCs (1 TAD per Cask[a])	Number of 7-packs	Number of TRUPACTS	Number of TRUPACT Shipments	Number of CNS8-120B Shipments	Number of RH-72B Shipments
WVDP	Process Plant D&D	258	NA	NA	NA	NA	772
INL	Other [Various] – (Solid)	1	NA	NA	NA	NA	2
RPS	Contact handled and remote handled TRU from proposed RPS operations, including target fabrication and plutonium purification	206	NA	NA	NA	NA	617
DOE	**Subtotal**	**647**	NA	NA	NA	NA	**1935**
	Total RH Projected	**648**	NA	NA	NA	NA	**1937**

[a]One TAD may be loaded with either three canisters or two SWBs.
Note: NA = Not Applicable

Table 6 GTCC LLW and DOE GTCC-Like Other Waste Stream Activities[a]

Owner	Description	Activity (Ci)							
		C-14	Mn-54	Fe-55	Ni-59	Co-60	Ni-63	Sr-90	Mo-93
Stored CH Waste									
Commercial		0	0	0	0	0	0	0	0
Commercial	**Subtotal (Ci)**	**0**	**0**	**0**	**0**	**0**	**0**	**0**	**0**
BWXT	Transuranic-contaminated waste	2.43E-05	0	0	1.54E-06	3.14E-06	6.80E-05	8.06E-01	0
INL	Other (31 mixed transuranic items)	1.39E-06	1.51E-12	4.86E-04	2.70E-04	1.29E-02	3.52E-02	1.37E+01	0
INL	Other (transuranic)	0	0	0	0	8.25E-03	0	0	0
INL	Other (10 radioactive only waste items)	2.86E-04	0	0	1.81E-05	3.70E-05	8.01E-04	9.50E+00	0
WVDP	TRU waste	4.15E+03	7.85E-05	1.90E+02	0	3.74E+00	0	3.07E+03	0
WVDP	Other TRU waste	1.46E+03	2.75E-05	6.67E+01	0	1.31E+00	0	1.08E+03	0
DOE	**Subtotal (Ci)**	**5.60E+03**	**1.06E-04**	**2.57E+02**	**2.90E-04**	**5.07E+00**	**3.61E-02**	**4.17E+03**	**0**
	Total Stored CH (Ci)	**5.60E+03**	**1.06E-04**	**2.57E+02**	**2.90E-04**	**5.07E+00**	**3.61E-02**	**4.17E+03**	**0**
	Stored RH Waste								
Commercial	Misc TRU	5.62E-03	1.12E-07	1.78E-05	1.07E-01	1.35E+00	4.74E+00	1.07E+03	0
Commercial	**Subtotal (Ci)**	**5.62E-03**	**1.12E-07**	**1.78E-05**	**1.07E-01**	**1.35E+00**	**4.74E+00**	**1.07E+03**	**0**
BWXT	Transuranic-contaminated waste	2.47E-03	4.90E-08	7.80E-06	4.70E-02	5.92E-01	2.08E+00	4.70E+02	0
INL	Other (remote handled transuranic)	0	0	0	0	0	0	0	0
BJOR	Molten Salt Reactor Experiment (MSRE)	0	0	0	0	0	0	6.16E+00	0
ORNL	RH	0	5.66E-04	0	0	1.40E+02	0	2.62E+03	0
WVDP	TRU waste	5.55E+03	0	2.25E+02	9.00E+03	1.18E+04	5.26E+05	2.82E+05	0
WVDP	Other TRU waste	4.59E+02	0	1.86E+01	7.45E+02	9.76E+02	4.35E+04	2.33E+04	0
DOE	**Subtotal (Ci)**	**6.00E+03**	**5.66E-04**	**2.43E+02**	**9.75E+03**	**1.29E+04**	**5.69E+05**	**3.08E+05**	**0**
	Total Stored RH (Ci)	**6.00E+03**	**5.67E-04**	**2.43E+02**	**9.75E+03**	**1.29E+04**	**5.69E+05**	**3.09E+05**	**0**

Table 6 GTCC LLW and DOE GTCC-Like Other Waste Stream Activities (Continued)

Owner	Description	Activity (Ci)							
		C-14	Mn-54	Fe-55	Ni-59	Co-60	Ni-63	Sr-90	Mo-93
Projected CH Waste									
BWXT	Potentially non-defense TRU from maintenance activities	4.31E-06	0	0	2.72E-07	3.50E-06	1.33E-05	2.00E-01	0
RPS	RPS Operations, including target fabrication and plutonium purification	0	0	0	0	0	0	0	0
WVDP	CH TRU Waste	4.44E+03	7.09E+00	7.10E+03	2.34E+02	8.32E+01	6.79E+02	4.89E+03	0
DOE	**Subtotal (Ci)**	**4.44E+03**	**7.09E+00**	**7.10E+03**	**2.34E+02**	**8.32E+01**	**6.79E+02**	**4.89E+03**	**0**
	Total CH Projected (Ci)	**4.44E+03**	**7.09E+00**	**7.10E+03**	**2.34E+02**	**8.32E+01**	**6.79E+02**	**4.89E+03**	**0**
Projected RH Waste									
Commercial	Misc TRU	1.71E-04	2.87E-04	1.88E-05	3.25E-03	2.58E-01	1.58E-01	4.55E+01	0
Commercial	**Subtotal (Ci)**	**1.71E-04**	**2.87E-04**	**1.88E-05**	**3.25E-03**	**2.58E-01**	**1.58E-01**	**4.55E+01**	**0**
WVDP	RH TRU Waste	2.76E+03	4.41E+00	5.51E+00	6.32E+00	6.77E+01	4.06E+02	5.17E+04	0
INL	Other [Various] – (Solid)	2.83E-03	5.41E-06	2.64E+02	1.56E+01	1.30E+02	1.51E+03	0	7.77E-03
RPS	RPS Operations, including target fabrication and plutonium purification	0	0	0	0	0	0	2.22E+04	0
DOE	**Subtotal (Ci)**	**2.76E+03**	**4.41E+00**	**2.70E+02**	**2.19E+01**	**1.98E+02**	**1.92E+03**	**7.39E+04**	**7.77E-03**
	Total RH Projected (Ci)	**2.76E+03**	**4.41E+00**	**2.70E+02**	**2.19E+01**	**1.98E+02**	**1.92E+03**	**7.39E+04**	**7.77E-03**

Table 6 GTCC LLW and DOE GTCC-Like Other Waste Stream Activities (Continued)

Owner	Description	Activity (Ci)							
		Nb-94	Tc-99	Cs-137	Pb-210	Th-229	Th-230	U-233	U-235
Stored CH Waste									
Commercial		0	0	5.94E+00	0	0	0	0	0
Commercial	**Subtotal (Ci)**	**0**	**0**	**5.94E+00**	**0**	**0**	**0**	**0**	**0**
BWXT	Transuranic-contaminated waste	0	2.94E-03	1.08E-01	2.46E-05	2.73E-05	1.92E-06	2.21E-02	7.84E-05
INL	Other (31 mixed transuranic items)	3.31E-04	3.73E-03	1.41E+01	3.57E-06	4.06E-05	5.27E-03	3.98E-05	8.73E-05
INL	Other (transuranic)	0	0	4.39E+01	0	0	0	6.13E+00	8.64E-05
INL	Other (10 radioactive only waste items)	0	3.47E-02	1.27E+00	2.90E-04	3.21E-04	2.26E-05	2.61E-01	9.24E-04
WVDP	TRU waste	0	1.56E+02	1.71E+03	0	6.92E+02	1.25E+02	4.78E+03	9.56E+00
WVDP	Other TRU waste	0	5.47E+01	5.98E+02	0	2.43E+02	4.37E+01	1.68E+03	3.35E+00
DOE	**Subtotal (Ci)**	**3.31E-04**	**2.11E+02**	**2.36E+03**	**3.18E-04**	**9.34E+02**	**1.68E+02**	**6.46E+03**	**1.29E+01**
	Total Stored CH (Ci)	**3.31E-04**	**2.11E+02**	**2.37E+03**	**3.18E-04**	**9.34E+02**	**1.68E+02**	**6.46E+03**	**1.29E+01**
Stored RH Waste									
Commercial	Misc TRU	0	7.43E-01	1.44E+03	3.23E-09	8.60E-04	8.75E-06	5.92E-01	5.10E-03
Commercial	**Subtotal (Ci)**	**0**	**7.43E-01**	**1.44E+03**	**3.23E-09**	**8.60E-04**	**8.75E-06**	**5.92E-01**	**5.10E-03**
BWXT	Transuranic-contaminated waste	0	3.26E-01	6.31E+02	1.42E-09	3.77E-04	3.84E-06	2.60E-01	2.24E-03
INL	Other (remote handled transuranic)	0	0	0	0	0	0	0	0
BJOR	RH Fuel flush salts from Molten Salt Reactor Experiment (MSRE) (10 salt cans)	0	0	5.16E+00	0	0	0	0	0
ORNL	RH	0	2.00E+00	6.66E+03	0	0	0	7.75E+02	0
WVDP	TRU waste	5.55E+00	9.01E+03	2.38E+05	0	4.17E+00	1.52E+00	1.84E+02	1.46E+01
WVDP	Other TRU waste	4.60E-01	7.46E+02	1.97E+04	0	3.45E-01	1.26E-01	1.52E+01	1.21E+00
DOE	**Subtotal (Ci)**	**6.01E+00**	**9.75E+03**	**2.65E+05**	**1.42E-09**	**4.51E+00**	**1.65E+00**	**9.74E+02**	**1.58E+01**
	Total Stored RH (Ci)	**6.01E+00**	**9.75E+03**	**2.67E+05**	**4.64E-09**	**4.52E+00**	**1.65E+00**	**9.75E+02**	**1.58E+01**

Table 6 GTCC LLW and DOE GTCC-Like Other Waste Stream Activities (Continued)

Owner	Description	Activity (Ci)							
		Nb-94	Tc-99	Cs-137	Pb-210	Th-229	Th-230	U-233	U-235
Projected CH Waste									
BWXT	Potentially non-defense TRU from maintenance activities	0	5.21E-04	2.63E-02	6.72E-06	4.83E-06	3.39E-07	3.92E-03	1.39E-05
RPS	RPS Operations, including target fabrication and plutonium purification	0	0	4.25E-07	0	0	0	0	0
WVDP	CH TRU Waste	2.27E+02	1.73E+02	2.77E+03	0	7.39E+02	1.33E+02	5.10E+03	1.02E+01
DOE	**Subtotal (Ci)**	**2.27E+02**	**1.73E+02**	**2.77E+03**	**6.72E-06**	**7.39E+02**	**1.33E+02**	**5.10E+03**	**1.02E+01**
	Total CH Projected (Ci)	**2.27E+02**	**1.73E+02**	**2.77E+03**	**6.72E-06**	**7.39E+02**	**1.33E+02**	**5.10E+03**	**1.02E+01**
Projected RH Waste									
Commercial	Misc TRU	0	2.25E-02	6.02E+01	1.51E-10	2.61E-05	2.65E-07	1.79E-02	1.54E-04
Commercial	**Subtotal (Ci)**	**0**	**2.25E-02**	**6.02E+01**	**1.51E-10**	**2.61E-05**	**2.65E-07**	**1.79E-02**	**1.54E-04**
WVDP	RH TRU Waste	3.90E-03	1.13E+02	3.26E+05	0	4.60E+02	8.28E+01	3.17E+03	6.36E+00
INL	Other [Various] – (Solid)	1.93E-02	1.42E-03	0	0	0	0	0	0
RPS	RPS Operations, including target fabrication and plutonium purification	0	0	6.55E+04	0	0	0	0	0
DOE	**Subtotal (Ci)**	**2.32E-02**	**1.13E+02**	**3.92E+05**	**0**	**4.60E+02**	**8.28E+01**	**3.17E+03**	**6.36E+00**
	Total RH Projected (Ci)	**2.32E-02**	**1.13E+02**	**3.92E+05**	**1.51E-10**	**4.60E+02**	**8.28E+01**	**3.17E+03**	**6.36E+00**

Table 6 GTCC LLW and DOE GTCC-Like Other Waste Stream Activities (Continued)

Owner	Description	Activity (Ci)								
		Np-237	Pu-238	Pu-239	Pu-240	Pu-241	Am-241	Pu-242	Am-243	Cm-244
Stored CH Waste										
Commercial		0	0	0	0	0	5.01E+00	0	0	0
Commercial	**Subtotal (Ci)**	**0**	**0**	**0**	**0**	**0**	**5.01E+00**	**0**	**0**	**0**
BWXT	Transuranic-contaminated waste	1.25E-04	2.61E+01	1.16E+01	1.89E+00	2.01E+01	9.34E+00	2.45E-04	1.56E-03	7.26E-02
INL	Other (31 mixed transuranic items)	4.29E-01	1.05E+00	1.12E+00	6.87E-02	4.36E+00	5.40E-01	6.00E-06	9.81E-06	4.27E-04
INL	Other (transuranic)	0	0	0	0	0	1.24E+01	0	0	0
INL	Other (10 radioactive only waste items)	1.47E-03	3.07E+02	1.37E+02	2.23E+01	2.37E+02	1.10E+02	2.89E-03	1.84E-02	8.56E-01
WVDP	TRU waste	1.52E+01	3.60E+05	2.77E+05	2.21E+05	3.32E+06	9.75E+05	1.39E+03	1.07E+04	4.30E+02
WVDP	Other TRU waste	5.34E+00	1.26E+05	9.71E+04	7.76E+04	1.16E+06	3.42E+05	4.86E+02	3.74E+03	1.51E+02
DOE	**Subtotal (Ci)**	**2.10E+01**	**4.86E+05**	**3.74E+05**	**2.99E+05**	**4.48E+06**	**1.32E+06**	**1.87E+03**	**1.44E+04**	**5.81E+02**
	Total Stored CH (Ci)	**2.10E+01**	**4.86E+05**	**3.74E+05**	**2.99E+05**	**4.48E+06**	**1.32E+06**	**1.87E+03**	**1.44E+04**	**5.81E+02**
Stored RH Waste										
Commercial	Misc TRU	3.12E-03	1.59E+01	2.44E+01	7.37E+00	3.10E+02	6.31E+01	2.23E-03	4.62E-03	2.97E+00
Commercial	**Subtotal (Ci)**	**3.12E-03**	**1.59E+01**	**2.44E+01**	**7.37E+00**	**3.10E+02**	**6.31E+01**	**2.23E-03**	**4.62E-03**	**2.97E+00**
BWXT	Transuranic-contaminated waste	1.37E-03	6.98E+00	1.07E+01	3.23E+00	1.36E+02	2.77E+01	9.81E-04	2.03E-03	1.30E+00
INL	Other (remote handled transuranic)	0	0	0	0	0	8.52E+01	0	0	0
BJOR	RH Fuel flush salts from Molten Salt Reactor Experiment (MSRE) (10 salt cans)	0	1.80E+00	1.81E+01	7.02E+00	7.84E+00	1.98E+00	1.10E-03	0	0
ORNL	RH	0	6.62E+02	1.93E+02	3.10E+01	0	0	0	0	6.42E+02
WVDP	TRU waste	7.26E+01	1.01E+04	8.67E+04	6.56E+04	2.06E+05	7.78E+04	2.18E+02	4.86E+03	5.38E+02
WVDP	Other TRU waste	6.01E+00	8.33E+02	7.18E+03	5.43E+03	1.71E+04	6.44E+03	1.81E+01	4.02E+02	4.46E+01
DOE	**Subtotal (Ci)**	**7.87E+01**	**1.16E+04**	**9.41E+04**	**7.11E+04**	**2.23E+05**	**8.43E+04**	**2.36E+02**	**5.26E+03**	**1.23E+03**
	Total Stored RH (Ci)	**7.87E+01**	**1.16E+04**	**9.42E+04**	**7.11E+04**	**2.24E+05**	**8.44E+04**	**2.36E+02**	**5.26E+03**	**1.23E+03**

Table 6 GTCC LLW and DOE GTCC-Like Other Waste Stream Activities (Continued)

Owner	Description	Activity (Ci)								
		Np-237	Pu-238	Pu-239	Pu-240	Pu-241	Am-241	Pu-242	Am-243	Cm-244
Projected CH Waste										
BWXT	Potentially non-defense TRU from maintenance activities	2.22E-05	5.16E+00	2.06E+00	3.35E-01	6.98E+00	1.69E+00	4.34E-05	2.77E-04	2.20E-02
RPS	RPS Operations, including target fabrication and plutonium purification	0	2.03E+01	4.21E+01	1.65E+01	4.17E+02	3.68E+01	0	0	0
WVDP	TRU waste	1.63E+01	4.28E+05	2.95E+05	2.36E+05	6.94E+06	1.06E+06	1.48E+03	1.14E+04	7.84E+02
DOE	**Subtotal (Ci)**	**1.63E+01**	**4.28E+05**	**2.96E+05**	**2.36E+05**	**6.94E+06**	**1.06E+06**	**1.48E+03**	**1.14E+04**	**7.84E+02**
	Total CH Projected (Ci)	**1.63E+01**	**4.28E+05**	**2.96E+05**	**2.36E+05**	**6.94E+06**	**1.06E+06**	**1.48E+03**	**1.14E+04**	**7.84E+02**
Projected RH Waste										
Commercial	Misc TRU	9.47E-05	5.38E-01	7.41E-01	2.24E-01	1.84E+01	1.95E+00	6.77E-05	1.40E-04	1.54E-01
Commercial	**Subtotal (Ci)**	**9.47E-05**	**5.38E-01**	**7.41E-01**	**2.24E-01**	**1.84E+01**	**1.95E+00**	**6.77E-05**	**1.40E-04**	**1.54E-01**
WVDP	RH	1.08E+01	2.67E+05	1.84E+05	1.47E+05	4.32E+06	6.63E+05	9.20E+02	7.08E+03	5.86E+02
INL	Other [Various] – (Solid)	0	0	0	0	0	0	0	0	0
RPS	RPS Operations, including target fabrication and plutonium purification	5.68E+00	3.00E+03	1.61E+00	6.88E-01	1.49E+02	3.92E+01	0	0	0
DOE	**Subtotal (Ci)**	**1.65E+01**	**2.70E+05**	**1.84E+05**	**1.47E+05**	**4.32E+06**	**6.63E+05**	**9.20E+02**	**7.08E+03**	**5.86E+02**
	Total RH Projected (Ci)	**1.65E+01**	**2.70E+05**	**1.84E+05**	**1.47E+05**	**4.32E+06**	**6.63E+05**	**9.20E+02**	**7.08E+03**	**5.86E+02**

[a] Data in this table is a summary of data from Table 4.

Table 7 GTCC LLW and DOE GTCC-Like Other Waste Stream Container Activities

Owner	Description	55-gallon Drum Equivalent Container Activity at Time of Availability (Ci/Container)							
		C-14	Mn-54	Fe-55	Ni-59	Co-60	Ni-63	Sr-90	Mo-93
Stored CH Waste									
Commercial		0	0	0	0	0	0	0	0
Commercial	**Average Over Commercial**	**0**	**0**	**0**	**0**	**0**	**0**	**0**	**0**
BWXT	Transuranic-contaminated waste	1.43E-06	0	0	9.05E-08	1.85E-07	4.00E-06	4.74E-02	0
INL	Other (31 mixed transuranic items)	1.48E-08	1.61E-14	5.17E-06	2.88E-06	1.37E-04	3.75E-04	1.46E-01	0
INL	Other (transuranic)	0	0	0	0	2.75E-03	0	0	0
INL	Other (10 radioactive only waste items)	1.49E-06	0	0	9.44E-08	1.93E-07	4.17E-06	4.95E-02	0
WVDP	TRU waste	2.72E+00	5.14E-08	1.25E-01	0	2.45E-03	0	2.01E+00	0
WVDP	Other TRU waste	2.68E+00	5.07E-08	1.23E-01	0	2.41E-03	0	1.98E+00	0
DOE	**Average Over DOE**	**2.37E+00**	**4.48E-08**	**1.09E-01**	**1.23E-07**	**2.14E-03**	**1.52E-05**	**1.76E+00**	**0**
	Average Over CH Stored	**2.18E+00**	**4.12E-08**	**9.99E-02**	**1.13E-07**	**1.97E-03**	**1.40E-05**	**1.62E+00**	**0**
Stored RH Waste									
Commercial	Misc TRU	3.54E-05	7.02E-10	1.12E-07	6.74E-04	8.48E-03	2.98E-02	6.74E+00	0
Commercial	**Average Over Commercial**	**3.54E-05**	**7.02E-10**	**1.12E-07**	**6.74E-04**	**8.48E-03**	**2.98E-02**	**6.74E+00**	**0**
BWXT	Transuranic-contaminated waste	3.53E-05	6.99E-10	1.11E-07	6.72E-04	8.45E-03	2.97E-02	6.72E+00	0
INL	Other (remote handled transuranic)	0	0	0	0	0	0	0	0
BJOR	RH Fuel flush salts from Molten Salt Reactor Experiment (MSRE)	0	0	0	0	0	0	3.08E-01	0
ORNL		0	1.42E-04	0	0	3.49E+01	0	6.55E+02	0
WVDP	TRU Waste	3.54E+00	3.34E-07	1.44E-01	5.76E+00	7.62E+00	3.36E+02	1.82E+02	0
DOE	**Average Over DOE**	**2.04E+00**	**1.93E-07**	**8.28E-02**	**3.32E+00**	**4.39E+00**	**1.93E+02**	**1.05E+02**	**0**
	Average Over RH Stored	**1.94E+00**	**1.83E-07**	**7.85E-02**	**3.15E+00**	**4.16E+00**	**1.84E+02**	**9.97E+01**	**0**

Table 7 GTCC LLW and DOE GTCC-Like Other Waste Stream Container Activities (Continued)

Owner	Description	55-gallon Drum Equivalent Container Activity at Time of Availability (Ci/Container)							
		C-14	Mn-54	Fe-55	Ni-59	Co-60	Ni-63	Sr-90	Mo-93
Projected CH Waste									
BWXT	Potentially non-defense TRU from maintenance activities	1.44E-06	0	0	9.08E-08	1.17E-06	4.42E-06	6.66E-02	0
RPS	RPS operations, including target fabrication and plutonium purification	0	0	0	0	0	0	0	0
WVDP	CH TRU Waste	8.23E+00	1.32E-02	1.32E+01	4.33E-01	1.54E-01	1.26E+00	9.07E+00	0
DOE	**Average Over DOE**	**6.53E-01**	**1.04E-03**	**1.04E+00**	**3.44E-02**	**1.23E-02**	**1.00E-01**	**7.20E-01**	**0**
	Average Over CH Projected	**6.53E-01**	**1.04E-03**	**1.04E+00**	**3.44E-02**	**1.23E-02**	**1.00E-01**	**7.20E-01**	**0**
Projected RH Waste									
Commercial	Misc TRU	3.41E-05	5.73E-05	3.77E-06	6.50E-04	5.15E-02	3.16E-02	9.10E+00	0
Commercial	**Average Over Commercial**	**3.41E-05**	**5.73E-05**	**3.77E-06**	**6.50E-04**	**5.15E-02**	**3.16E-02**	**9.10E+00**	**0**
WVDP	RH TRU	1.63E+01	2.61E-02	3.26E-02	3.74E-02	4.01E-01	2.40E+00	3.06E+02	0
INL	Other (Mixed-TRA)	7.08E-04	1.35E-06	6.60E+01	3.90E+00	3.25E+01	3.78E+02	0	1.94E-03
RPS	RPS operations, including target fabrication and plutonium purification	0	0	0	0	0	0	1.20E+01	0.00E+00
DOE	**Average Over DOE**	**4.77E-01**	**7.61E-04**	**4.65E-02**	**3.78E-03**	**3.41E-02**	**3.30E-01**	**1.27E+01**	**1.34E-06**
	Average Over RH Projected	**4.76E-01**	**7.61E-04**	**4.65E-02**	**3.78E-03**	**3.41E-02**	**3.30E-01**	**1.27E+01**	**1.34E-06**

Table 7 GTCC LLW and DOE GTCC-Like Other Waste Stream Container Activities (Continued)

Owner	Description	55-gallon Drum Equivalent Container Activity at Time of Availability (Ci/Container)							
		Nb-94	Tc-99	Cs-137	Pb-210	Th-229	Th-230	U-233	U-235
Stored CH Waste									
Commercial	Am-241,Cs-137, Co-60	0	0	2.86E-02	0	0	0	0	0
Commercial	**Average Over Commercial**	**0**	**0**	**2.86E-02**	**0**	**0**	**0**	**0**	**0**
BWXT	Transuranic-contaminated waste	0	1.73E-04	6.33E-03	1.45E-06	1.60E-06	1.13E-07	1.30E-03	4.61E-06
INL	Other (31 mixed transuranic items)	3.52E-06	3.97E-05	1.50E-01	3.80E-08	4.32E-07	5.61E-05	4.23E-07	9.29E-07
INL	Other (transuranic)	0	0	1.46E+01	0	0	0	2.04E+00	2.88E-05
INL	Other (10 radioactive only waste items)	0	1.80E-04	6.60E-03	1.51E-06	1.67E-06	1.18E-07	1.36E-03	4.81E-06
WVDP	TRU waste	0	1.02E-01	1.12E+00	0	4.53E-01	8.16E-02	3.13E+00	6.26E-03
WVDP	Other TRU waste	0	1.01E-01	1.10E+00	0	4.47E-01	8.05E-02	3.09E+00	6.17E-03
DOE	**Average Over DOE**	**1.88E-08**	**1.20E-02**	**1.34E-01**	**1.81E-08**	**5.32E-02**	**9.58E-03**	**3.68E-01**	**7.35E-04**
	Average Over CH Stored	**1.29E-07**	**8.18E-02**	**9.21E-01**	**1.24E-07**	**3.63E-01**	**6.54E-02**	**2.51E+00**	**5.02E-03**
Stored RH Waste									
Commercial	Misc TRU	0	4.67E-03	9.05E+00	2.03E-11	5.41E-06	5.50E-08	3.72E-03	3.21E-05
Commercial	**Average Over Commercial**	**0**	**4.67E-03**	**9.05E+00**	**2.03E-11**	**5.41E-06**	**5.50E-08**	**3.72E-03**	**3.21E-05**
BWXT	Transuranic-contaminated waste	0	4.66E-03	9.02E+00	2.02E-11	5.39E-06	5.49E-08	3.71E-03	3.19E-05
INL	Other (remote handled transuranic)	0	0	0	0	0	0	0	0
BJOR	RH Fuel flush salts from Molten Salt Reactor Experiment (MSRE)	0	0	2.58E-01	0	0	0	0	0
ORNL		0	5.00E-01	1.67E+03	0	0	0	1.94E+02	0
WVDP	TRU waste	3.55E-03	5.76E+00	1.57E+02	8.36E-13	2.66E-03	9.75E-04	5.75E-01	9.31E-03
DOE	**Average Over DOE**	**2.04E-03**	**3.32E+00**	**9.02E+01**	**4.82E-13**	**1.53E-03**	**5.61E-04**	**3.31E-01**	**5.36E-03**
	Average Over RH Stored	**1.94E-03**	**3.15E+00**	**8.60E+01**	**1.50E-12**	**1.46E-03**	**5.33E-04**	**3.14E-01**	**5.09E-03**

Table 7 GTCC LLW and DOE GTCC-Like Other Waste Stream Container Activities (Continued)

Owner	Description	55-gallon Drum Equivalent Container Activity at Time of Availability (Ci/Container)							
		Nb-94	Tc-99	Cs-137	Pb-210	Th-229	Th-230	U-233	U-235
Projected CH Waste									
BWXT	Potentially non-defense TRU from maintenance activities	0	1.74E-04	8.76E-03	2.24E-06	1.61E-06	1.13E-07	1.31E-03	4.63E-06
RPS	RPS operations, including target fabrication and plutonium purification	0	0	1.01E-10	0	0	0	0	0
WVDP	TRU waste	4.20E-01	3.21E-01	5.14E+00	0	1.37E+00	2.47E-01	9.45E+00	1.89E-02
DOE	**Average Over DOE**	**3.34E-02**	**2.55E-02**	**4.08E-01**	**9.90E-10**	**1.09E-01**	**1.96E-02**	**7.50E-01**	**1.50E-03**
	Average Over CH Projected	**3.34E-02**	**2.55E-02**	**4.08E-01**	**9.90E-10**	**1.09E-01**	**1.96E-02**	**7.50E-01**	**1.50E-03**
Projected RH Waste									
Commercial	Misc TRU	0	4.50E-03	1.20E+01	3.02E-11	5.22E-06	5.31E-08	3.59E-03	3.09E-05
Commercial	**Average Over Commercial**	**0**	**4.50E-03**	**1.20E+01**	**3.02E-11**	**5.22E-06**	**5.31E-08**	**3.59E-03**	**3.09E-05**
WVDP	Remote Handled Waste Facility Operations	2.31E-05	6.69E-01	1.93E+03	0.00E+00	2.72E+00	4.90E-01	1.88E+01	3.76E-02
INL	Other (Mixed-TRA)	4.83E-03	3.55E-04	0	0	0	0	0	0
RPS	RPS operations, including target fabrication and plutonium purification	0	0	3.54E+01	0	0	0	0	0
DOE	**Average Over DOE**	**4.00E-06**	**1.95E-02**	**6.76E+01**	0	**7.93E-02**	**1.43E-02**	**5.47E-01**	**1.10E-03**
	Average Over RH Projected	**4.00E-06**	**1.95E-02**	**6.76E+01**	**2.61E-14**	**7.92E-02**	**1.43E-02**	**5.47E-01**	**1.10E-03**

Table 7 GTCC LLW and DOE GTCC-Like Other Waste Stream Container Activities (Continued)

Owner	Description	55-gallon Drum Equivalent Container Activity at Time of Availability (Ci/Container)								
		Np-237	Pu-238	Pu-239	Pu-240	Pu-241	Am-241	Pu-242	Am-243	Cm-244
Stored CH Waste										
Commercial	Am-241,Cs-137, Co-60	0	0	0	0	0	2.41E-02	0	0	0
Commercial	**Average Over Commercial**	**0**	**0**	**0**	**0**	**0**	**2.41E-02**	**0**	**0**	**0**
BWXT	Transuranic-contaminated waste	7.36E-06	1.54E+00	6.84E-01	1.11E-01	1.18E+00	5.50E-01	1.44E-05	9.19E-05	4.27E-03
INL	Other (31 mixed transuranic items)	4.56E-03	1.12E-02	1.19E-02	7.31E-04	4.64E-02	5.75E-03	6.39E-08	1.04E-07	4.54E-06
INL	Other (transuranic)	0	0	0	0	0	4.14E+00	0	0	0
INL	Other (10 radioactive only waste items)	7.68E-06	1.60E+00	7.13E-01	1.16E-01	1.23E+00	5.73E-01	1.50E-05	9.59E-05	4.46E-03
WVDP	TRU waste	9.97E-03	2.35E+02	1.81E+02	1.45E+02	2.17E+03	6.38E+02	9.07E-01	6.97E+00	2.81E-01
WVDP	Other TRU waste	9.84E-03	2.32E+02	1.79E+02	1.43E+02	2.14E+03	6.30E+02	8.95E-01	6.88E+00	2.77E-01
DOE	**Average Over DOE**	**8.88E-03**	**2.05E+02**	**1.58E+02**	**1.26E+02**	**1.90E+03**	**5.57E+02**	**7.91E-01**	**6.08E+00**	**2.46E-01**
	Average Over CH Stored	**8.17E-03**	**1.89E+02**	**1.45E+02**	**1.16E+02**	**1.74E+03**	**5.12E+02**	**7.27E-01**	**5.59E+00**	**2.26E-01**
Stored RH Waste										
Commercial	Misc TRU	1.97E-05	1.00E-01	1.54E-01	4.64E-02	1.95E+00	3.97E-01	1.41E-05	2.91E-05	1.87E-02
Commercial	**Average Over Commercial**	**1.97E-05**	**1.00E-01**	**1.54E-01**	**4.64E-02**	**1.95E+00**	**3.97E-01**	**1.41E-05**	**2.91E-05**	**1.87E-02**
BWXT	Transuranic-contaminated waste	1.96E-05	9.97E-02	1.53E-01	4.62E-02	1.95E+00	3.95E-01	1.40E-05	2.90E-05	1.86E-02
INL	Other (remote handled transuranic)	0	0	0	0	0	2.19E+00	0	0	0
BJOR	RH Fuel flush salts from Molten Salt Reactor Experiment (MSRE)	0	9.02E-02	9.04E-01	3.51E-01	3.92E-01	9.88E-02	5.48E-05	0	0
ORNL		0	1.65E+02	4.82E+01	7.74E+00	0	0	0	0	1.61E+02
WVDP	TRU waste	4.64E-02	6.83E+00	5.56E+01	4.20E+01	1.32E+02	4.98E+01	1.40E-01	3.11E+00	7.24E-01
DOE	**Average Over DOE**	**2.67E-02**	**3.93E+00**	**3.20E+01**	**2.42E+01**	**7.59E+01**	**2.87E+01**	**8.04E-02**	**1.79E+00**	**4.17E-01**
	Average Over RH Stored	**2.54E-02**	**3.74E+00**	**3.04E+01**	**2.29E+01**	**7.21E+01**	**2.72E+01**	**7.62E-02**	**1.70E+00**	**3.97E-01**

Table 7 GTCC LLW and DOE GTCC-Like Other Waste Stream Container Activities (Continued)

Owner	Description	55-gallon Drum Equivalent Container Activity at Time of Availability (Ci/Container)								
		Np-237	Pu-238	Pu-239	Pu-240	Pu-241	Am-241	Pu-242	Am-243	Cm-244
Projected CH Waste										
BWXT	Potentially non-defense TRU from maintenance activities	7.38E-06	1.72E+00	6.86E-01	1.12E-01	2.33E+00	5.64E-01	1.45E-05	9.23E-05	7.32E-03
RPS	RPS operations, including target fabrication and plutonium purification	0	4.83E-03	1.00E-02	3.92E-03	9.91E-02	8.75E-03	0	0	0
WVDP	TRU waste	3.02E-02	7.95E+02	5.48E+02	4.39E+02	1.29E+04	1.97E+03	2.74E+00	2.11E+01	1.45E+00
DOE	**Average Over DOE**	**2.40E-03**	**6.31E+01**	**4.35E+01**	**3.48E+01**	**1.02E+03**	**1.57E+02**	**2.18E-01**	**1.68E+00**	**1.15E-01**
	Average Over CH Projected	**2.40E-03**	**6.31E+01**	**4.35E+01**	**3.48E+01**	**1.02E+03**	**1.57E+02**	**2.18E-01**	**1.68E+00**	**1.15E-01**
Projected RH Waste										
Commercial	Misc TRU	1.89E-05	1.08E-01	1.48E-01	4.47E-02	3.69E+00	3.91E-01	1.35E-05	2.80E-05	3.08E-02
Commercial	**Average Over Commercial**	**1.89E-05**	**1.08E-01**	**1.48E-01**	**4.47E-02**	**3.69E+00**	**3.91E-01**	**1.35E-05**	**2.80E-05**	**3.08E-02**
WVDP	Remote Handled Waste Facility Operations	6.39E-02	1.58E+03	1.09E+03	8.71E+02	2.56E+04	3.92E+03	5.44E+00	4.19E+01	3.47E+00
INL	Other (Mixed-TRA)	0	0	0	0	0	0	0	0	0
RPS	RPS operations, including target fabrication and plutonium purification	3.07E-03	1.62E+00	8.72E-04	3.72E-04	8.07E-02	2.12E-02	0	0	0
DOE	**Average Over DOE**	**2.84E-03**	**4.66E+01**	**3.17E+01**	**2.54E+01**	**7.46E+02**	**1.14E+02**	**1.59E-01**	**1.22E+00**	**1.01E-01**
	Average Over RH Projected	**2.84E-03**	**4.65E+01**	**3.17E+01**	**2.54E+01**	**7.45E+02**	**1.14E+02**	**1.59E-01**	**1.22E+00**	**1.01E-01**

APPENDIX G

Package Configuration for Disposing of Nuclear Utility Greater-Than-Class-C Low-Level Radioactive Waste in the Waste Isolation Pilot Plant (WIPP)

Leigh, C. D. and J. R. Trone

547011

EIS PRIVILEGED

Package Configuration for Disposing of Nuclear Utility Greater-Than-Class-C Low-Level Radioactive Waste in the Waste Isolation Pilot Plant (WIPP)

Author:	Christi Leigh		9/10/07
	Print	Signature	Date
Author:	Janis Trone		9/10/07
	Print	Signature	Date
Technical Review:	Brian Fox		9/10/07
	Print	Signature	Date
Management Review:	Mark Rigali	for M. Rigali	9/11/07
	Print	Signature	Date

GTCC-EIS-AR-3.2-545078

CONTENTS

1. INTRODUCTION 3
1.1 PURPOSE 3
1.2 ASSUMPTIONS 3
1.3 WEIGHT OF STAINLESS STEEL OUTER SHELL 5
1.3.1 Volume of Stainless Steel Outer Shell 5
1.3.2 Volume of Stainless Steel Outer Wall 5
1.3.3 Volume of Stainless Steel Top/Bottom Plates 5
1.3.4 Total Volume and Weight of Stainless Steel Outer Shell 6
1.4 WEIGHT OF LEAD SHIELDING INNER SHELL 6
1.4.1 Volume of Lead Shielding Inner Shell 6
1.4.2 Volume of Lead Shielding Inner Wall 6
1.4.3 Volume of Lead Shielding Top/Bottom Plate 7
1.5 WEIGHT OF THE WASTE 7
1.5.1 Volume of the Waste 8
1.5.2 Density of the Waste 8
1.5.3 Weight of Metal Waste 8
1.5.4 Volume of Metal Waste 9

2. RESULTS 11

3. REFERENCES 13

FIGURES

Figure 1. Schematic diagram of proposed package for disposal of GTCC LLW from Nuclear Utilities in WIPP 4

Figure 2. Empty Package Weight Versus Lead Shielding Thickness 7

Figure 3. Co-60 Activity Allowed in the Package as a Function of Lead Thickness 10

Figure 4. Loaded Package Weight Versus Activity of Co-60 in the Package, and Lead Shielding Thickness 11

Figure 5. Schematic diagram of a.) half-AMC and b.) half-SAMC 12

1. INTRODUCTION

The focus of the upcoming Greater-Than-Class-C (GTCC) low-level radioactive waste (LLW) Disposal Environmental Impact Statement (EIS) is to evaluate the potential environmental impacts from the construction, operation, closure and post-closure performance of a disposal facility for GTCC LLW and potentially Department of Energy (DOE) GTCC-like waste[1]. This document shows how a package configuration for disposal of GTCC LLW from the nuclear utilities in the Waste Isolation Pilot Plant (WIPP) was chosen for use in the EIS evaluations.

1.1 PURPOSE

The purpose of this analysis is to define a package that could be used for disposal of GTCC LLW from the nuclear utilities in WIPP. The package described in this document is being formulated solely to support the EIS evaluations and is not being recommended for disposal of GTCC LLW from the nuclear utilities in WIPP at this time.

1.2 ASSUMPTIONS

It is assumed that the package is a hollow stainless steel cylinder with two plates attached to the top and bottom. The thickness of stainless steel is one inch (0.025 m). The total height of the package is 55 inches (1.397 m). Lead shielding inner shell comprises an additional hollow cylinder that is inserted into the stainless steel cylinder. Two lead shielding plates at the top and bottom are also included. The outside package diameter is 28 inches (0.711 m). The lead shielding inner shell thickness is variable and is determined in this calculation. Figure 1 is an illustration of the package.

The full package weight is limited to a value that can be transported via truck to WIPP. Using the CNS3-55 (NRC 2007), a single canister can be transported to WIPP via truck as long as the loaded canister weight does not exceed 9220 pounds (4.61 tons).

Loading of the package with waste is limited not only by weight but by dose. The surface dose rate, calculated using the MSHIELD[2] code must be less than 200 mRem/hour, the criteria for contact-handled (CH) waste at WIPP.

[1] DOE GTCC-like waste includes DOE-owned waste having characteristics similar to GTCC LLW for which there is currently no disposal path.
[2] MicroShield® 7.01 is a computer code designed to provide a model to be used for shielding calculation and design in different geometrical scenarios. MicroShield 7.01, a code developed by Grove Software, was used to model the dose points.

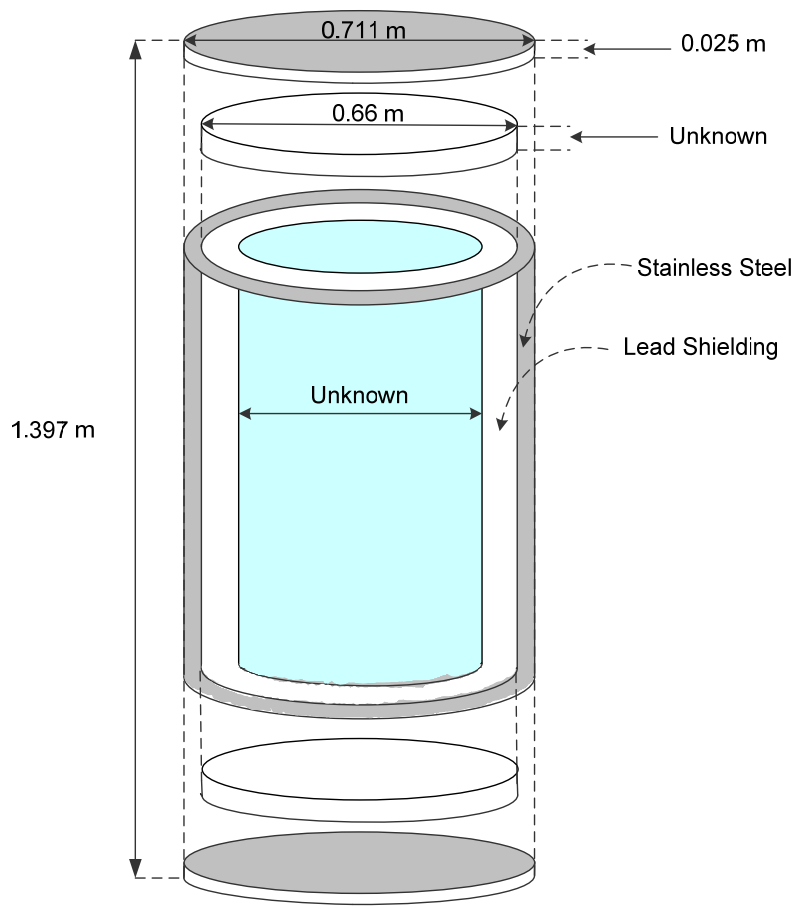

Figure 1. Schematic diagram of proposed package for disposal of GTCC LLW from Nuclear Utilities in WIPP

The empty package weight is the weight of the stainless steel outer shell plus the weight of the lead shielding inner shell. The empty package weight is:

$$W_{empty\ package} = W_{os} + W_{is} \quad (1)$$

Where,

$W_{empty\ package}$ = weight of the empty package
W_{os} = weight of the stainless steel outer shell
W_{is} = weight of the lead shielding inner shell

This equation is expanded and further defined below.

1.3 WEIGHT OF STAINLESS STEEL OUTER SHELL

The weight of the stainless steel outer shell is:

$$W_{os} = V_{os} * d_{ss} \quad (2)$$

Where,

W_{os} = weight of the stainless steel outer shell
V_{os} = volume of the stainless steel outer shell
d_{ss} = density of stainless steel (8044 kg/m^3) (Schermerhorn 2007)

1.3.1 Volume of Stainless Steel Outer Shell

The volume of the stainless steel outer shell is:

$$V_{os} = V_{ow} + (2*V_{op}) \quad (3)$$

Where,

V_{os} = volume of the stainless steel outer shell
V_{ow} = volume of the stainless steel outer wall
V_{op} = volume of stainless steel top/bottom plate

1.3.2 Volume of Stainless Steel Outer Wall

The volume of the stainless steel outer wall is:

$$V_{ow} = [\pi(D/2)^2 * (L-2WT)] - [\pi([D-2WT]/2)^2 * (L-2WT)] \quad (4)$$

Where,

V_{ow} = volume of the stainless steel outer wall
D = diameter of the stainless steel outer shell (0.711 m)
L = exterior length of the stainless steel outer shell (1.397 m)
WT = wall thickness of the stainless steel outer shell (0.025 m)

Calculating V_{ow} from Equation 4 gives a stainless steel outer wall volume of 0.074 m^3.

1.3.3 Volume of Stainless Steel Top/Bottom Plates

The volume of the stainless steel top/bottom plate is:

$$V_{op} = \pi(D/2)^2 * WT \quad (5)$$

Where,

V_{op} = volume of stainless steel top/bottom plate
D = outside diameter of the stainless steel outer shell (0.711 m)
WT = wall thickness of the stainless steel outer shell (0.025 m)

Calculating V_{op} from Equation 5 gives a stainless steel top/bottom plate volume of 0.010 m^3.

1.3.4 Total Volume and Weight of Stainless Steel Outer Shell

Calculating V_{os} from Equation 3 gives a stainless steel outer shell volume of 0.094 m^3. Finally, Equation 2 gives the weight of the stainless steel outer shell as 755 kg or 0.83 tons.

1.4 WEIGHT OF LEAD SHIELDING INNER SHELL

The weight of the lead shielding inner shell is:

$$W_{is} = V_{is} * \rho_{pb} \quad (6)$$

Where,

W_{is} = weight of the lead shielding inner shell
V_{is} = volume of the lead shielding inner shell
ρ_{pb} = density of lead (11340 kg/m^3) (Lide 2003)

1.4.1 Volume of Lead Shielding Inner Shell

The volume of the lead shielding inner shell is:

$$V_{is} = V_{iw} + (2*V_{ip}) \quad (7)$$

Where,

V_{is} = volume of the lead shielding inner shell
V_{iw} = volume of the lead shielding inner wall
V_{ip} = volume of lead shielding top/bottom plate

1.4.2 Volume of Lead Shielding Inner Wall

The volume of the lead shielding inner wall is:

$$V_{iw} = [\pi([D-2WT]/2)^2 * (L-2ST-2WT)] - [\pi([D-2WT-2ST]/2)^2 * (L-2WT-2ST)] \quad (8)$$

Where,

V_{iw} = volume of the lead shielding inner wall
D = outside diameter of the stainless steel outer shell (0.711 m)
L = exterior length of the stainless steel outer shell (1.397 m)
WT = wall thickness of the stainless steel outer shell (0.025 m)
ST = lead shielding inner wall thickness (m)

1.4.3 Volume of Lead Shielding Top/Bottom Plate

The volume of the lead shielding top/bottom plate is:

$$V_{ip} = \pi([D-2WT]/2)^2 * ST \quad (9)$$

Where,

V_{ip} = volume of lead shielding top/bottom plate
D = outside diameter of the stainless steel outer shell (0.711 m)
WT = wall thickness of the stainless steel outer shell (0.025 m)
ST = shield insert thickness (m)

Figure 2 shows a plot of the empty package weight versus the thickness of the lead shielding.

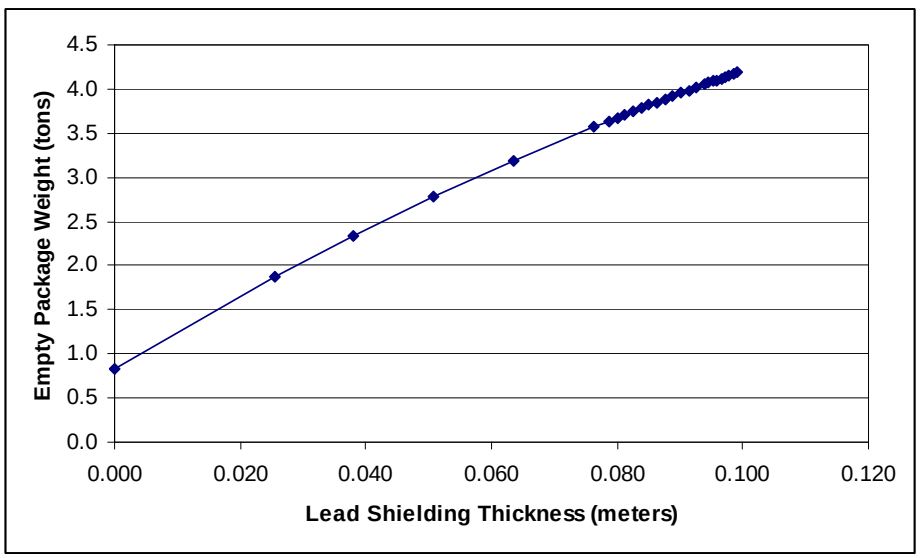

Figure 2. Empty Package Weight Versus Lead Shielding Thickness

1.5 WEIGHT OF THE WASTE

The weight of the packaged waste is:

$$W_{ws} = V_{ws} * \rho_{ws} \quad (10)$$

Where,

W_{ws} = the weight of the packaged waste
V_{ws} = the packaged volume of the waste
ρ_{ws} = density of the waste

1.5.1 Volume of the Waste

The packaged volume of the waste is:

$$V_{ws} = \pi([D-2WT-2ST]/2)^2 * (L-2WT-2ST) \quad (11)$$

Where,

V_{ws} = the packaged volume of the waste
D = outside diameter of the stainless steel outer shell (0.711 m)
WT = wall thickness of the stainless steel outer shell (0.025 m)
ST = lead shield inner shell thickness (m)
L = exterior length of the stainless steel outer shell (1.397 m)

1.5.2 Density of the Waste

The density of the packaged waste is:

$$\rho_{ws} = (m_{mw} + m_{air})/ V_{ws} \quad (12)$$

Where,

ρ_{ws} = density of the packaged waste
m_{mw} = the weight of metal waste
m_{air} = the weight of air
V_{ws} = the packaged volume of the waste

1.5.3 Weight of Metal Waste

Since the mass of air is negligible, the weight of the waste is equal to the weight of metal waste. The weight of metal waste per package depends on the activity of Co-60 allowed in the package in order to maintain a surface dose rate of < 200 mRem/hr (for CH waste at WIPP). This activity is (Dennis 2007):

$$A_p = 5.164 * \exp[68.53136 * ST] \quad (13)$$

Where,

A_p = the activity of Co-60 allowed in the package in order to maintain a surface dose rate < 200 mRem/hr
ST = shield insert thickness (m)

The weight of the metal waste is:

$$M_{mw} = v_{mw} * d_{ss} \quad (14)$$

Where,

M_{mw} = weight of metal waste
v_{mw} = volume of the metal waste
d_{ss} = density of stainless steel (8044 kg/m^3) (Schermerhorn 2007)

1.5.4 Volume of Metal Waste

The volume of metal waste is:

$$v_{mw} = A_p/SA_{mw} \quad (15)$$

Where,

v_{mw} = weight of metal waste
A_p = the activity of Co-60 allowed in the package in order to maintain a surface dose rate < 200 mRem/hr
SA_{mw} = the specific activity of the metal waste

The specific activity of the waste can be calculated from the data given in Schelling et al. (2007a). Schelling et al. (2007a) indicates that the activity of Co-60, at the time the waste is available for disposal is 5.05E+07 Ci and that the total volume of waste is 881.91 m^3. The volume given in Schelling et al., (2007a) is a packaged volume. It is reasonable to assume that the packaged volume given in Schelling et al. (2007a) is 75% metal and 25% void space.[3] Therefore, the volume of metal is 661.43 m^3 and the specific activity of the metal waste is 76349 Ci/ m^3. Converting this to curies per ton can be performed using the density of stainless steel (8044 kg/ m^3) and the conversion from kg to tons (0.00110 ton per kg). The resulting specific activity for the metal waste is 8629 Ci/ton.

Figure 3 shows how the activity of Co-60 allowed increases with the thickness of the lead shielding.

---

[3] Packed weights were calculated assuming a 75% packaging efficiency (25% empty volume) and LLW material density equivalent to stainless steel (8044 kg/m^3). The assumption is based on appendices E of NUREG/CR-6174 NRC (1996b). NUREG/CR-6174; PNL-9975. Revised Analysis of Decommissioning for the Reference Boiling Water Reactor Power Station. Nuclear Regulatory Commission. Washington, D.C.

and NUREG/CR-5884 NRC (1995b). NUREG/CR-5884; PNL-8742, Volume 2. Revised Analysis of Decommissioning for the Reference Pressurized Water Reactor Power Station. Nuclear Regulatory Commission. Washington, D.C.

which provide details of the analyses used to estimated packaged disposal volumes for BWR and PWR, respectively. The appendices describe the dimensions of individual components, an approach to cutting up large parts and packaging them into rectangular canisters, and the size of the packaging canisters. For the BWR, the canister dimensions were 9”x9”x178”, resulting in an internal volume of 0.24 m^3. The GTCC component volume of 5.364 m^3 was packaged into 29 canisters, implying a 78% packaging efficiency (22% empty volume) or a packaging factor of 1.28. Similarly, for the PWR, the canister dimensions were 9”x9”x180” (0.24m^3), and the GTCC component volume of 8.415m^3 was packaged into 46 canisters, implying a 76% packaging efficiency (24% empty volume) or a packaging factor of 1.31.

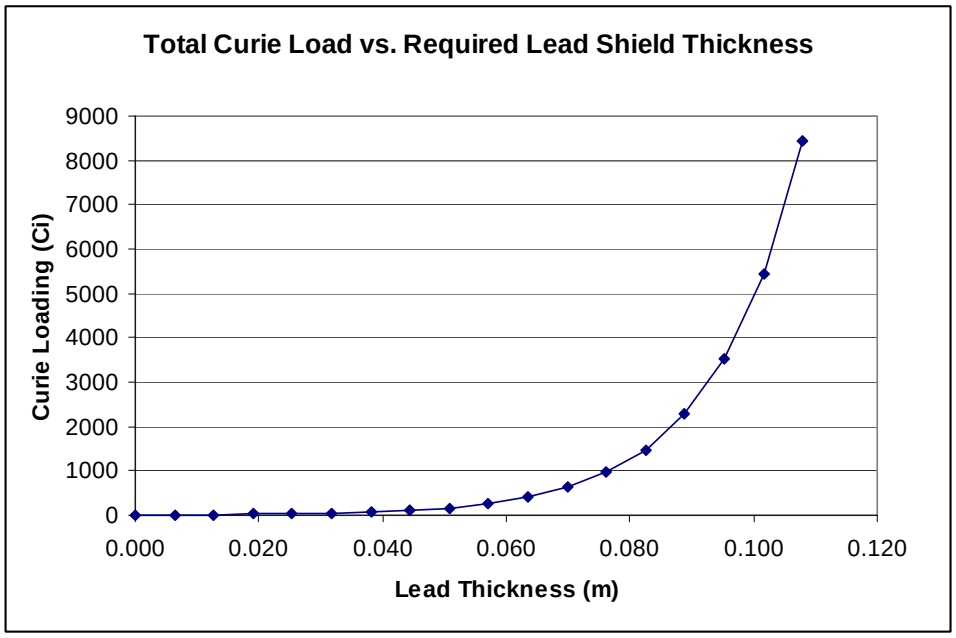

Figure 3. Co-60 Activity Allowed in the Package as a Function of Lead Thickness

1.6 WEIGHT OF LOADED CONTAINER

The weight of the loaded package is:

$$W_{lp} = W_{os} + W_{is} + W_{ws} \tag{16}$$

Where,

W_{lp} = the weight of the loaded packaged
W_{os} = weight of the stainless steel outer shell
W_{is} = weight of the lead shielding inner shell
W_{ws} = the weight of the packaged waste

The weight of the loaded package is the sum of the weight of the stainless steel outer shell, calculated in equation 2, the weight of the lead shielding inner shell, calculated in equation 6 and the weight of the packaged waste, calculated in equation 10. The weight of the lead shielding inner shell and the weight of the packaged waste are dependent on one another. Both are influenced by the limitation of the loaded package weight of 4.61 tons and by the external dose rate of 200 mRem/hr. Therefore, as the lead shielding thickness increases, the amount of curies the package can contain also increases, and this increases the loaded package waste. The point at which the lead shielding thickness and waste volume in the package yields a loaded package weight which meets the limitation of 4.61 tons for the loaded package weight will be the final configuration for the package.

2. RESULTS

Figure 4 shows the activity of Co-60 in the package (Ci) versus the loaded package weights in tons and the thickness of lead shielding (m) versus the loaded package weights in tons. Figure 4 demonstrates that the maximum number of curies possible in the package, given the constraint of a package dose rate of <200 mRem/hour and a maximum package weight of 4.61 tons (vertical red line), is 4023 curies with a lead shielding thickness of 0.097 meters (3.825 inches).

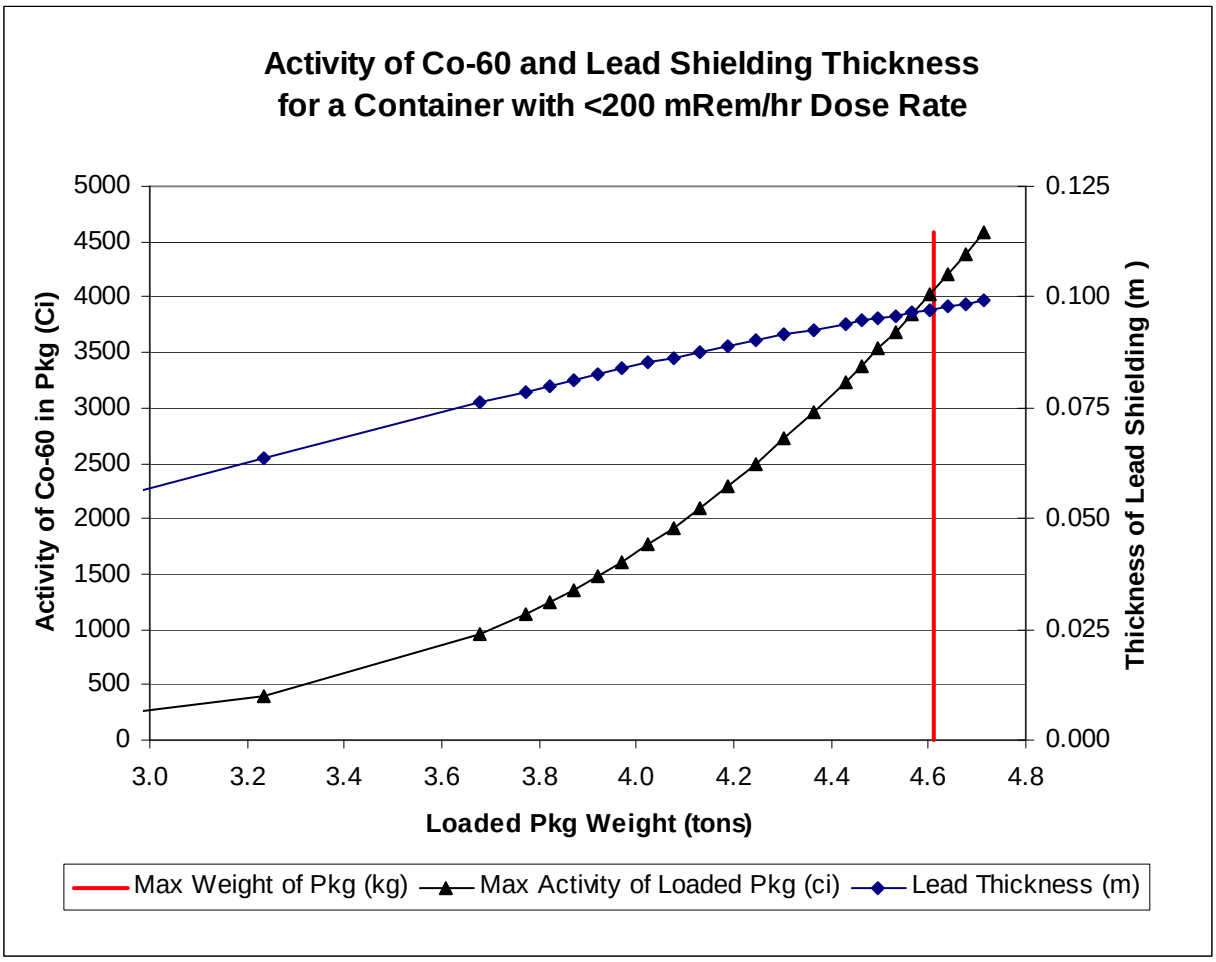

Figure 4. Activity of Co-60 in the Package Versus Loaded Package Weight, and Lead Shielding Thickness Versus Loaded Package Weight

The Activated Metal Canister (AMC) and Shielding AMC (SAMC) packages, currently available for disposal of GTCC LLW, must be transported by rail because the loaded weight is too heavy to transport via truck. Transportation of GTCC LLW to WIPP will require a package that may be transported to WIPP via truck. We, therefore, propose a new package that will meet the weight limitation for truck transport (4.61 tons maximum package weight) and the criteria for CH waste of WIPP (surface dose rate of less than 200 mRem/hour). Figure 5 shows the final configuration of the proposed package. We suggest the AMC be reduced to the half it's size

(half-AMC, or h-AMC) as the package, see figure 5.a. The h-AMC with lead shielding (half-Shielded AMC or h-SAMC) with the calculated lead shielding thickness of 0.097 is shown below in figure 5.b.

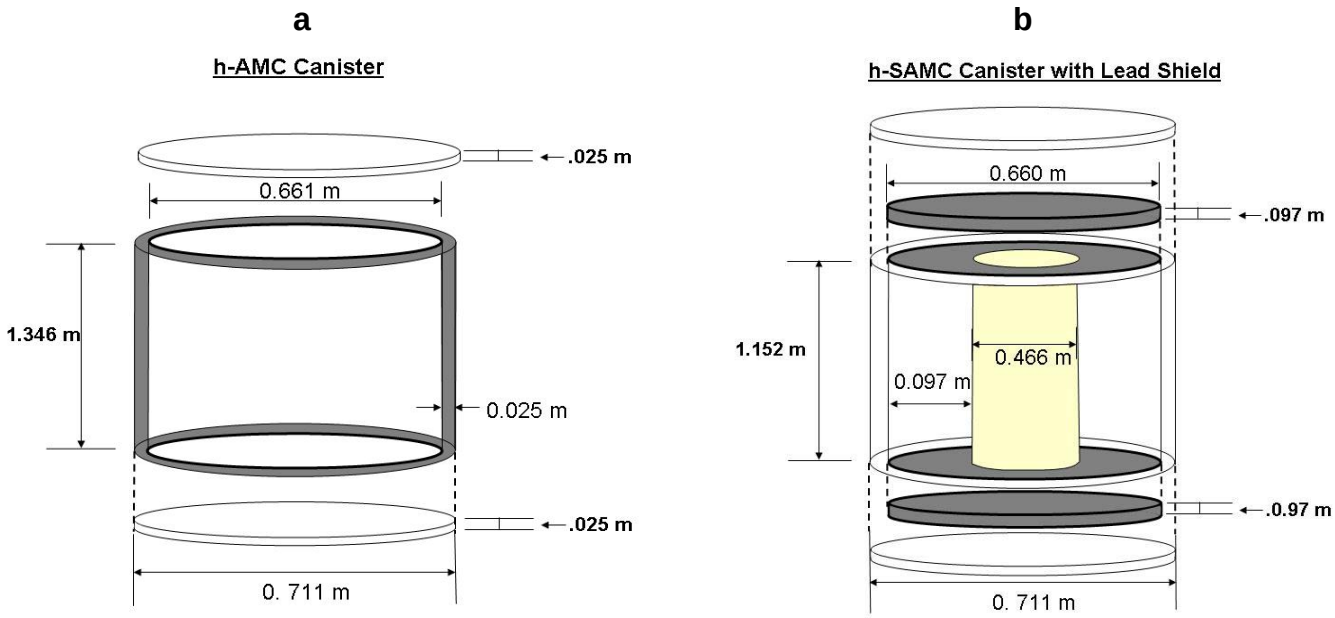

Figure 5. Schematic diagram of a.) half-AMC and b.) half-SAMC

3. REFERENCES

Dennis, M. (2007). Supporting Shielding Calculations for the Greater-Than-Class C Low-Level Radioactive Waste Environmental Impact Statement Evaluations: Curie Content Lead Thickness Equation. ERMS 546596. Sandia National Laboratories. Albuquerque, NM.

Lide, D. R. (2003). Handbook of Chemistry and Physics, 84th Edition. Boca Raton, Florida.

NRC (1995). NUREG/CR-5884; PNL-8742, Volume 2. Revised Analysis of Decommissioning for the Reference Pressurized Water Reactor Power Station. Nuclear Regulatory Commission. Washington, D.C.

NRC (1996). NUREG/CR-6174; PNL-9975. Revised Analysis of Decommissioning for the Reference Boiling Water Reactor Power Station. Nuclear Regulatory Commission. Washington, D.C.

NRC (2007). Certificate of Compliance for Radioactive Material Packages, CNS 3-55, Certificate Number 5805, Revision 24. ERMS 546230. Nuclear Regulator Commission. Washington, D.C.

Schelling, J., C. D. Leigh and J. R. Trone (2007). Supporting Nuclear Utility Inventory Estimates for the Greater-Than-Class-C Low-Level Radioactive Waste Environmental Impact Statement Evaluations. ERMS pending. Sandia National Laboratories. Carlsbad, NM.

Schermerhorn, J. R. (2007). Hand Calculations for GTCC Waste Container. ERMS 546601. AMEC.

APPENDIX H

Supporting Nuclear Utility Inventory Estimates for the Greater-Than-Class-C Low-Level Radioactive Waste Environmental Impact Statement Evaluations

Schelling, J., C. D. Leigh, et al.

547023

EIS PRIVILEGED

Supporting Nuclear Utility Inventory Estimates for the Greater-Than-Class-C Low-Level Radioactive Waste Environmental Impact Statement Evaluations

Author:	Joe Schelling	for	9/6/07
	Print	Signature	Date
Author:	Christi Leigh		9/5/07
	Print	Signature	Date
Author:	Janis Trone		9/4/07
	Print	Signature	Date
Technical Review:	Brian Fox		9/6/07
	Print	Signature	Date
Management Review:	Mark Rigali	for M. Rigali	9/6/07
	Print	Signature	Date

GTCC-EIS: AR: 3.2: 545018

CONTENTS

1. INTRODUCTION 6

2. ESTIMATED VOLUMES.....6

3. ESTIMATED ACTIVITIES.....7
   3.1.1 Activity of GTCC LLW from PWRs 8
   3.1.2 Activity of GTCC LLW from BWRs.....11

4. PACKAGES 12

5. REFERENCES 14

APPENDIX A: ESTIMATED GTCC LLW VOLUMES FOR US REACTORS
APPENDIX B: ESTIMATED GTCC LLW TOTAL ACTIVITIES FOR US REACTORS
APPENDIX C: ESTIMATED GTCC LLW RADIONUCLIDE ACTIVITIES AT SHUTDOWN FOR US REACTORS
APPENDIX D: ESTIMATED GTCC LLW RADIONUCLIDE ACTIVITIES WHEN WASTE IS AVAILABLE FOR DISPOSAL FOR US REACTORS
APPENDIX E: ESTIMATED GTCC LLW CANISTER NUMBERS FOR US REACTORS
APPENDIX F: ESTIMATED CONTAINER ACTIVITIES FOR GTCC LLW FROM US REACTORS
APPENDIX G: ESTIMATED GTCC LLW DISPOSAL PACKAGES FOR VARIOUS DISPOSAL CONFIGURATIONS
APPENDIX H: ESTIMATED GTCC LLW SHIPMENTS FROM US REACTORS

TABLES

Table 1. Activity Information from Table C.1-3 of NUREG/CR-0130 for PWR components considered to be GTCC LLW[a] 9

Table 2. Radionuclide Activities In Components Considered to be GTCC LLW for the Reference PWR at Reactor Shutdown 10

Table 3. Activity Information from Table E.1-1 of NUREG/CR-0672 for BWR components considered to be GTCC LLW 12

TABLE A-1. ESTIMATED GTCC LLW VOLUMES FOR US REACTORS

TABLE B-1. ESTIMATED GTCC LLW TOTAL ACTIVITIES FOR US REACTORS

TABLE C-1: ESTIMATED GTCC LLW RADIONUCLIDE ACTIVITIES AT SHUTDOWN FOR US REACTORS

TABLE D-1. ESTIMATED GTCC LLW RADIONUCLIDE ACTIVITIES WHEN WASTE IS AVAILABLE FOR DISPOSAL FOR US REACTORS

TABLE E-1. ESTIMATED GTCC LLW CANISTER NUMBERS FOR US REACTORS

TABLE F-1. ESTIMATED CONTAINER ACTIVITIES FOR GTCC LLW FROM US REACTORS - AMCs

TABLE F-2. ESTIMATED CONTAINER ACTIVITIES FOR GTCC LLW FROM US REACTORS – SAMCs

TABLE F-3. ESTIMATED CONTAINER ACTIVITIES FOR GTCC LLW FROM US REACTORS – h-SAMCs

TABLE F-4. ESTIMATED CONTAINER ACTIVITIES FOR GTCC LLW FROM US REACTORS – RH Canisters

TABLE G-1. ESTIMATED GTCC LLW DISPOSAL PACKAGES FOR VARIOUS DISPOSAL CONFIGURATIONS

TABLE H-1. ESTIMATED GTCC LLW SHIPMENTS FROM US REACTORS

ACRONYMS AND ABBREVIATIONS

AMC	Activated Metal Canister
BWR	Boiling Water Reactor
Ci	Curies
CNS 3-55	Chem-Nuclear Systems Package
DOE	U.S. Department of Energy
EFPY	Effective Full Power Year
EIS	Environmental Impact Statement
EIA	Energy Information Administration
EPRI	Electric Power Research Institute
GTCC	Greater-Than-Class-C
h-SAMC	half – Shielded Activated Metal Canister
LLW	Low-Level Radioactive Waste
MW(e)	Mega Watts of Electrical Output
MWt	Mega Watts of Thermal Output
NAC-STC	NAC International Storage Transportation Container
NRC	U.S. Nuclear Regulatory Commission
PWR	Pressurized Water Reactor
RAMPAC	Radioactive Material Packaging
RH	Remote Handled
SAMC	Shielded Activated Metal Canister
SNL	Sandia National Laboratories

GLOSSARY

Disposal package – Assembly of components intended to retain the radioactive material for disposal.

Shipping container – Assembly of components intended to retain the radioactive material during transport and necessary to ensure compliance with transportation packaging regulations.

Shipment – Movement of a waste package or waste packages from its (their) original stored location to the disposal location by truck or rail.

Waste package – Packaging together with radioactive contents presented for transport.

1. INTRODUCTION

The focus of the upcoming Greater-Than-Class-C (GTCC) low-level radioactive waste (LLW) Disposal Environmental Impact Statement (EIS) is to evaluate the potential environmental impacts from the construction, operation, closure and post-closure performance of a disposal facility for GTCC LLW and potentially Department of Energy (DOE) GTCC-like waste. This document presents estimates of the GTCC LLW inventory that might be expected from nuclear reactors in the U.S.

A recent Sandia National Laboratories (SNL) report (U. S. DOE 2006b) describes the method used to estimate the inventory of GTCC LLW from nuclear utilities. The estimates are based on scaling factors derived from analyses of the decommissioning of a reference boiling water reactor (BWR) and a reference pressurized water reactor (PWR). Similar scaling factors are presented in *Integrated Data Base Report – 1994: U.S. Spent Nuclear Fuel and Radioactive Waste Inventories, Projections, and Characteristics," Rev. 11* (DOE/RW-0006) (U. S. DOE 1995a). Other reactor decommissioning data from the Electric Power Research Institute (EPRI) and other sources support these inventory estimates (EPRI 2003b; EPRI 2003a; EPRI 2005). Thus, scaling factors are used in this report to estimate volume and activity for GTCC LLW from nuclear reactors in the U.S.

2. ESTIMATED VOLUMES

The total packaged volume of GTCC LLW for a PWR or BWR at shutdown is estimated by multiplying the reactor operating capacity by the volume scaling factor for either the reference PWR [9.40E-03 m^3/MW(e)] or reference BWR [6.03E-03 m^3/MW(e)][1] Volume scaling factors were calculated following the methodology described in the NRC reference reactor reports (NUREG/CR-0672 (NRC 1980) and NUREG/CR-6174 (NRC 1996b) for BWRS; NUREG/CR-0130 (NRC 1978) and NUREG/CR-5884 (NRC 1993) for PWRS), and were established by dividing the packaged volume of GTCC waste by the operating capacity of the reference reactor.

For the 1155 MW(e) reference BWR, the packaged volume was 6.96 m^3, yielding a BWR volume scaling factor of 6.03E-03 m^3/MW(e). The packaged BWR GTCC volume was obtained from NUREG/CR-6174, Appendix E, (NRC 1996b) which indicates a total of 29 canisters of 0.24 m^3/canister for a total packaged volume of 6.96 m^3.

For the 1175 MW(e) reference PWR, the packaged volume was 11.04 m^3, yielding a PWR volume scaling factor of 9.40E-03 m^3/MW(e). The packaged PWR GTCC volume was obtained from NUREG/CR-5884, Appendix E, (NRC 1993)in particular Table E.3 and related text. The shroud was packaged in 8 canisters, the lower core barrel in 24 canisters, thermal shields in 6 canisters, and grid plates in 8 canisters, for a total of 46 canisters. Using a canister volume of 0.24m^3/canister gives the total packaged volume of 11.04 m^3.

[1] The volume scaling factors are slightly different from the values of 9.36E-03 m^3/MW(e) and 5.93E-03 m^3/MW(e) shown in U. S. DOE 1995.

Plant operating capacities were obtained from the *U.S. Nuclear Regulatory Commission (NRC) 2006–2007 Information Digest* (NRC 2006c). PWR operational capacities ranged from 476 to 1,335 MW(e), with an average of 956 MW(e) and median of 985 MW(e). BWR operational capacities ranged from 506 to 1,263 MW(e), with an average of 949 MW(e) and median of 1,026 MW(e). The estimated packaged volumes for nuclear reactors calculated using the volume scaling factors are shown in Appendix A.

3. ESTIMATED ACTIVITIES

The total activity for GTCC LLW components of a PWR or BWR at shutdown is estimated by multiplying the reactor operating capacity by the activity scaling factor for either the reference PWR [3.65E+03 Ci/MW(e)] or reference BWR [5.97E+03 Ci/MW(e)][2]. Activity scaling factors were calculated following the methodology described in the NRC reference reactor reports.

For BWRs, the peak activity concentrations for neutron-activated stainless steel at shutdown (NUREG/CR-0672 Table E.1-1 (NRC 1980)) were converted to volume-averaged concentrations by multiplying by the average/peak ratio for the core shroud (1.68E+06 Ci/m3, NUREG/CR-0672 Table E.1-6 (NRC 1980)). The concentrations were then multiplied by the assumed volume of the shroud component of 4.1 m^3 (NUREG/CR-0672, Addendum 2 (NRC 1980) identifies the core shroud as the only GTCC component and gives the volume as 4.1 m^3) to yield activities. Summing the individual nuclide activities gives the total GTCC activity (6.89E+06 Ci), which is divided by the operating capacity of the reference BWR (1155 MW(e)) to establish the BWR activity scaling factor of 5.97E+03 Ci/MW(e.)

For PWRs, an essentially equivalent process was followed for establishing the PWR activity scaling factor, although more components were involved and several assumptions were needed. Peak nuclide activity concentrations for the major nuclides were determined for the shroud, lower core barrel, thermal shields, and upper and lower grid plates from NUREG/CR-0130 Table C.1-3 (NRC 1978). The masses of these components were converted to volume using the 8035 kg/m^3 density for stainless steel (NRC 1978). Multiplying peak activity concentration for each component by its average/peak ratio and the component volume gave the nuclide activity at shutdown. The sum of the nuclide activities ($4.29 \times 10^{+6}$ Ci) was divided by the operating capacity (1175 MW(e)) to establish the PWR activity scaling factor of 3.65E+03 Ci/MW(e).

Estimated activities for GTCC LLW for all of the reactors included in this analysis at shutdown and time of availability (2019 for shutdown reactors and following sixty years of operation and a six year cooling period for operational reactors) calculated with the activity scaling factors are shown in Appendix B. Plant operating capacities used the information from the Energy Information Administration (EIA) website (EIA 2005).

In developing the estimating factors, 30 Effective Full Power Years (EFPY) over the initial 40-year license period is assumed. In reality, reactors that have been shutdown were not typically operated for that length of time. Most of the reactors still operating will operate for more than 40 years, and reactors in recent years have been operated at greater than 75% efficiency. These

[2] The activity scaling factors are slightly different from the values of 4.07E-03 Ci/MW(e) and 5.45E-03 Ci/MW(e) shown in U. S. DOE 1995.

uncertainties are not expected to have a significant impact on the results of the analysis for the following reasons. As described in NUREG-1437 (NRC 1996a), extending operational life does not appreciably increase radioactivity level at shutdown, because shorter-lived radionuclides reach an equilibrium concentration after about 20 years of operation, and the increase in concentration of longer-lived radionuclides is a very small fraction of the total activity at shutdown. Therefore, no corrections were made in this analysis for these factors.

3.1.1 Activity of GTCC LLW from PWRs

As discussed above, scaling factors are used to estimate total activities of GTCC LLW from decommissioned PWRs. To estimate individual radionuclide activities from the total activity for PWRs, Table C.1-3 from the NRC document, *Technology, Safety, and Costs of Decommissioning a Reference Pressurized Water Reactor Power Station* (NUREG/CR-0130) (NRC 1978) is used as a basis for calculation. NUREG/CR-0130 (NRC 1978) provides a detailed evaluation of the decommissioning of the reference PWR, the 1175 MW(e) Trojan plant, and was used in developing the scaling factors.

There are 69 operational and ten[3] shutdown PWRs included in this analysis. Table C.1-3 of NUREG/CR-0130 gives the radionuclide concentrations in major activated reactor components for the reference PWR at the time of reactor shutdown. The PWR components considered to be GTCC LLW (U. S. DOE 2006b) include the core shroud, the lower 4.72 m of the core barrel, the thermal shields, and the upper and lower grid plates. Table 1 shows activity information from Table C.1-3 of NUREG/CR-0130 for PWR components considered to be GTCC LLW.

There are a large number of radionuclides in GTCC LLW when the reactor is shutdown. The analysis in NUREG/CR-0130 (NRC 1978) used initial natural abundances of 53 isotopes and nominal handbook material compositions as a starting point for neutron activation calculations. NUREG/CR-0130 Table C.1-3 (NRC 1978) shows the resulting activity concentrations for the major activated components for thirteen isotopes having half-lives greater than thirty five days; shorter half-life isotopes decay rapidly and have little impact on decommissioning. Five short-lived radionuclides, ^{58}Co, ^{59}Fe, ^{65}Zn, ^{95}Nb, and ^{95}Zr, were not considered further in this analysis, because their low initial concentration and rapid decay did not make a significant contribution to the activity after about five years of decay time. ^{60}Co and ^{55}Fe dominate the inventory and the dose initially, but with 5.27 year and 2.7 year half-lives respectively, they diminish rapidly and are not as big of a dose concern at later times. Several other radionuclides have much longer half-lives and are present in sufficient concentration to provide long-term dose considerations. For these reasons, of the radionuclides considered in Table C.1-3 of NUREG/CR-0130 (NRC 1978), the more significant radionuclides for this analysis are ^{14}C, ^{54}Mn, ^{55}Fe, ^{59}Ni, ^{60}Co, ^{63}Ni, ^{93}Mo, and ^{94}Nb.

[3] The Trojan PWR was decommissioned without the generation of GTCC LLW, and it was therefore excluded from further consideration in this analysis.

Table 1. Activity Information from Table C.1-3 of NUREG/CR-0130 for PWR components considered to be GTCC LLW[a]

Isotope	Peak Activity Concentration (Ci/m^3)		
	Shroud[b]	Lower 4.72 m of Core Barrel	Thermal Shields
^{14}C	1.50E+02	1.80E+01	8.30E+00
^{54}Mn	6.80E+04	3.70E+03	1.70E+03
^{55}Fe	1.30E+06	1.50E+05	6.70E+04
^{59}Ni	7.40E+02	1.30E+02	5.00E+01
^{60}Co[c]	9.60E+05	9.30E+04	4.70E+04
^{63}Ni	1.20E+05	1.50E+04	6.80E+03
^{93}Mo	9.60E-01	5.20E-02	2.40E-02
^{94}Nb	5.40E+00	2.60E-01	1.20E-01
All others	1.98E+05	1.44E+04	6.60E+03
Sum (Ci/m^3)	2.65E+06	2.76E+05	1.29E+05
Average/Peak Ratio	0.755	0.637	0.778
Weight of Material (kg)	12,312	26,783	10,413
Volume of Material (m^3)[d]	1.53	3.3	1.30

[a]The data given here is only a subset of the data given in Table C.1-3 of NUREG/CR-0130 (NRC 1978); [b]Table C.1-3 indicates that values for the upper and lower grid plates are normalized to the shroud. No individual radionuclide activities are given for the upper and lower grid plates; [c]While Table C.1-3 gives upper and lower values for ^{60}Co, it recommends using the upper bound to compute all totals so only the upper bound is given here; [d]Conversion factor assumes stainless steel density of 8.035E+03 kg/m^3 (NRC 1978).

The individual radionuclide activities at the time of shutdown for the PWR components considered to be GTCC LLW are estimated using Equation 1, which is derived from the discussion of Table C.1-3 in NUREG/CR-0130 (NRC 1978).

$$A_{ic} = f_c \cdot D_{ic} \cdot V_c \qquad (1)$$

A_{ic} is the activity of the isotope (i) in the PWR component (c); D_{ic} is the peak activity concentration (Ci/m^3) of the isotope in the component from Table C.1-3 of NUREG/CR-0130 (Table 1 here (NRC 1978)); f_c is the average to peak ratio for each component from Table C.1-3 of NUREG/CR-0130 (NRC 1978); and V_c is the volume of the component. Equation 1 is used to calculate the activities in Table 2.

Table C.1-3 of NUREG/CR-0130 (NRC 1978) does not give isotopic breakdowns for the upper and lower grid plates, but indicates their activity concentration is normalized to the shroud. Assuming the fractional radionuclide distribution is the same for the two grid plate components as for the shroud, the radionuclide distribution for the grid plates is calculated using Equation 1

with the shroud value for D_{ic}, and the f_c and V_c values of 0.01422 and 0.58 for the upper grid component and 0.3792 and 0.49 for the lower grid component, respectively.

Activity distributions for other PWRs are estimated by scaling the results for the reference PWR using the reference PWR activity scaling factor. If $A_{i,ref}$ is the activity of isotope *i* at the time of reactor shutdown for the reference PWR, then $A_{i,j}$, the activity of isotope *i* at the time of reactor shutdown for reactor *j*, is given by Equation 2. In Equation 2, C_j is the operating capacity of PWR *j* in MW(e), and S_{ref} is the scaling factor of 3.65E+03 Ci/MW(e) for PWRs.

$$A_{i,j} = S_{ref} \cdot [C_j] \cdot [A_{i,\,ref} / \sum A_{i,ref}] \qquad (2)$$

Table 2. Radionuclide Activities In Components Considered to be GTCC LLW for the Reference PWR at Reactor Shutdown

Isotope	Activity (Ci)					
	Shroud[a]	Lower 4.72 m of Core Barrel[a]	Shield[a]	Upper Grid Plate[b]	Lower Grid Plate[b]	Total
^{14}C	1.74E+02	3.82E+01	8.37E+00	1.23E+00	2.79E+01	2.49E+02
^{54}MN	7.87E+04	7.86E+03	1.71E+03	5.57E+02	1.27E+04	1.01E+05
^{55}Fe	1.50E+06	3.18E+05	6.75E+04	1.06E+04	2.42E+05	2.14E+06
^{59}Ni	8.56E+02	2.76E+02	5.04E+01	6.06E+00	1.38E+02	1.33E+03
^{60}Co[d]	1.11E+06	1.97E+05	4.74E+04	7.86E+03	1.79E+05	1.54E+06
^{63}Ni	1.39E+05	3.18E+04	6.86E+03	9.83E+02	2.23E+04	2.01E+05
^{93}Mo	1.11E+00	1.10E-01	2.42E-02	7.86E-03	1.79E-01	1.43E+00
^{94}Nb	6.25E+00	5.52E-01	1.21E-01	4.42E-02	1.01E+00	7.97E+00
All others	2.29E+05	3.06E+04	6.66E+03	1.62E+03	3.69E+04	3.05E+05
Total[c]	**3.06E+06**	**5.87E+05**	**1.30E+05**	**2.17E+04**	**4.93E+05**	**4.29E+06**

[a]Calculated using Equation 1; [b]Calculated using Equation 1 with the shroud value for D_{ic} and component values for f_c and V_c; [c]While NUREG/CR-0130 Table C.1-3 (NRC 1978) gives upper and lower values for ^{60}Co, it recommends using the upper bound to compute all totals so only the upper bound is given here.

For the 69 operational PWRs included in this analysis, it is assumed that GTCC LLW waste from nuclear utilities becomes available for disposal after sixty years of operation followed by a six-year cooling period. Therefore, radionuclide activities at the time the waste becomes available for disposal will be the values at shutdown that are decayed for six years using the standard decay equation:

$$A(t) = A_0\, e^{-\ln(2)\, t\, /\, \tau} \qquad (3)$$

where A(t) is the activity in curies at time t (the decay time), A_0 is the initial activity at the time of reactor shutdown, and τ is the half-life (KAPL 2002). This formulation of Equation 3 only

shows the decay term as the production term (i.e., ingrowth) for the radionuclides being considered here is zero.

The 2007 inventory update (U. S. DOE 2006b) includes information on nine PWRs that have already been shutdown (NRC 2006a). For these nine reactors, it is assumed that the GTCC LLW disposal facility becomes available in 2019, and the radionuclide activities are decayed from the year of shutdown to 2019, using Equation 3.

Radionuclide activities for both operational and shutdown PWRs at the time of reactor shutdown and when the GTCC LLW becomes available for disposal are shown in Appendix C (time of shutdown) and Appendix D (available for disposal).

3.1.2 Activity of GTCC LLW from BWRs

As was done for PWRs above, scaling factors are used to estimate total activities of GTCC LLW from decommissioned BWRs. To estimate individual radionuclide activities from the total activity, Table E.1-1 from the NRC document, *Technology, Safety, and Costs of Decommissioning a Reference Boiling Water Reactor Power Station* (NUREG/CR-0672) (NRC 1980) is used as a basis for calculation. NUREG/CR-0672 (NRC 1980) provides a detailed evaluation of the decommissioning of the reference BWR, the 1155 MW(e) Columbia Generating Station, and was used in developing the scaling factors.

There are 35 operational and eight[4] shutdown BWRs included in this analysis. Table E.1-1 of NUREG/CR-0672 (NRC 1980) gives the peak radioactivity level in major activated reactor components for the reference BWR at the time of reactor shutdown. The BWR component considered to be GTCC LLW is the core shroud (NRC 1980).

NUREG/CR-0672 Table E.1-1 (NRC 1980) shows activity concentrations for thirty-four radionuclides for the reference BWR analysis. Most of the radionuclides have low initial concentrations or decay rapidly enough to make an insignificant contribution to the activity after about a five year decay time. ^{60}Co and ^{55}Fe dominate the inventory and the dose initially, but with 5.27 year and 2.7 year half-lives respectively, they diminish rapidly and are not as big of a dose concern at later times. The remaining radionuclides have much longer half-lives and are present in sufficient concentration to provide long-term dose considerations. For these reasons, of the radionuclides considered in Table E.1-1 of NUREG/CR-0672 (NRC 1980), the more significant radionuclides for this analysis are ^{14}C, ^{54}Mn, ^{55}Fe, ^{59}Ni, ^{60}Co, ^{63}Ni, ^{93}Mo, and ^{94}Nb.

For the reference 1155 MW(e) Columbia Generating Station, the core shroud had a volume of 4.1 m^3 (from Table 5.2 of NUREG/CR-0672-Addendum 2 (NRC 1980)). The radionuclide activity values at shutdown were calculated for the reference BWR by multiplying the activity concentrations from Table E.1-1 of NUREG/CR-0672 (NRC 1980) by the core shroud volume and an average/peak ratio using Equation 1. The average/peak ratio of 0.589 is based on the ratio of the volume averaged total shroud activity concentration from Table E.1-6 (1.68E+06

[4] The Shoreham BWR was never operational and was decommissioned without the generation of GTCC LLW and was therefore excluded from further consideration in the analysis.

Ci/m^3) divided by the total peak shroud activity concentration from NUREG/CR-0672 Table E.1-1 (NRC 1980) (2.85E+06 Ci/m^3). As was done for PWRs above, activity distributions for other BWRs are estimated using Equation 2 to scale the results for the reference BWR using the BWR activity scaling factor or 5.97E+03 Ci/MW(e). The results are shown in Table 3.

Table 3. Activity Information from Table E.1-1 of NUREG/CR-0672 for BWR components considered to be GTCC LLW

Isotope	Activity Concentration (Ci/m^3)[a]	Activity (Ci) at Shutdown[b]
^{14}C	1.05E+02	2.54E+02
^{54}Mn	8.50E+03	2.05E+04
^{55}Fe	9.22E+05	2.23E+06
^{60}Co	3.36E+05	8.11E+05
^{59}Ni	6.36E+02	1.54E+03
^{63}Ni	8.75E+04	2.11E+05
^{94}Nb	1.50E+00	3.62E+00
^{93}Mo	3.26E-01	7.87E-01
All others	1.50E+06	3.62E+06
Total	**2.85E+06**	**6.89E+06**

[a]From Table E.1-1 of the NUREG/CR-0672 (NRC 1980); [b]The Activity at Shutdown is calculated by multiplying the Activity Concentration by the volume of the Core Shroud (4.1 m^3), and then applying Equation 2.

For the 35 operational BWRs included in this analysis, it is assumed that GTCC LLW waste from nuclear utilities becomes available for disposal after sixty years of operation, followed by a six-year cooling period. Therefore, radionuclide activities at the time the waste becomes available for disposal will be the values decayed for six years using Equation 3.

The 2007 inventory update also includes information on seven shutdown BWRs (U. S. DOE 2006b). For these seven reactors, it is assumed that the GTCC LLW disposal facility becomes available in 2019, and the radionuclide activities are decayed from the year of shutdown to 2019.

Radionuclide activities for both operational and shutdown BWRs at the time of reactor shutdown and when the GTCC LLW becomes available for disposal are shown in Appendix C (time of shutdown) and Appendix D (available for disposal).

4. PACKAGES

If it is assumed that all of the GTCC LLW from nuclear utilities is packaged in canisters with outer dimensions of 28 inches (0.71 m) diameter and 110 inches (2.79 m) long, the assumed basic inner dimensions are 26 inches (0.66 m) diameter and 108 inches (2.74 m) long, and the available internal volume of this canister would be 0.94 m^3 (Hillesheim et al. 2007b). These canisters are called Activated Metal Canisters (AMCs) in the remainder of this report. Calculation of the number of AMCs required for GTCC LLW from U.S. reactors is shown in

Appendix E. Calculation of the per container radionuclide activities for AMCs is given in Appendix F.

If it is assumed that all of the GTCC LLW from nuclear utilities is packaged in lead shielded canisters with outer dimensions of 28 inches (0.71 m) diameter and 110 inches (2.79 m) long, the shielded inner dimensions are 15.50 inches diameter (0.39 m) and 97.50 inches (2.48 m) long (Weiner et al. 2007) and the available internal volume of this canister would be 0.30 m^3 (Hillesheim et al. 2007b). These canisters are called Lead Shielded Activated Metal Canisters (SAMCs) in the remainder of this report. Calculation of the number of SAMCs required for GTCC LLW from U.S. reactors is shown in Appendix E. Calculation of the per container radionuclide activities for SAMCs is given in Appendix F.

If it is assumed that all of the GTCC LLW from nuclear utilities is packaged in lead shielded canisters with outer dimensions of 28 inches (0.71 m) diameter and 55 inches (1.40 m) long, the shielded inner dimensions are 18.36 inches (0.47 m) diameter and 45.7 inches long (Leigh et al. 2007b) and the available internal volume of this canister would be 0.197 m^3 (Hillesheim et al. 2007b). These canisters are called half-Shielded Activated Metal Canisters (h-SAMCs) in the remainder of this report. h-SAMCs are limited not by internal volume, as are the other canisters, but by total package weight and surface dose. Leigh et. al. (2007b) calculated the maximum curies of Co-60, (4023 Ci Co-60) allowable per h-SAMC under these restrictions. Calculation of the number of h-SAMCs required for GTCC LLW from U.S. reactors is shown in Appendix E. Calculation of the per container radionuclide activities for h-SAMCs is given in Appendix F.

GTCC LLW from nuclear utilities may be packaged in RH-TRU canisters with outer dimensions of 26 inches (0.7 m) diameter and 121 inches (3.1 m) long and an internal volume of 0.89 m^3(U. S. DOE 2006c). The RH-TRU canisters are assumed to be used for disposal at the WIPP facility only. The Land Withdrawl Act (U. S. Congress 1996) limits the total activity of RH waste to 23 curies per liter, or 23,000 curies per cubic meter. Calculation of the number of RH-TRU canisters required for GTCC LLW from U.S. reactors is shown in Appendix E. Calculation of the per container radionuclide activities for RH-TRU canisters is given in Appendix F.

Disposal of AMCs, SAMCs and h-SAMCs can occur in three-packs. Calculation of the number of three-packs of AMCs, SAMCs or 7-packs of h-SAMCs required for GTCC LLW from U.S. reactors is shown in Appendix G. RH-TRU canisters are disposed of one at a time.

If it is assumed that all GTCC LLW will be shipped in Type B shipping containers, a truck shipping container that can be used is the CNS 3-55 (NRC 2007). One h-SAMC and one RH-TRU canister can fit in a CNS 3-55, and one CNS 3-55 is loaded onto a truck. The AMC and SAMCs are too heavy to transport via truck. Calculation of the resulting number of truck shipments is shown in Appendix H.

The NAC-STC (NRC 2006b) is a rail cask that can be used to transport AMCs, and SAMCs Three AMCs, or three SAMCs can fit in a NAC-STC, and one NAC-STC is loaded onto a rail car. Calculation of the resulting number of rail shipments is shown in Appendix H.

5. REFERENCES

EIA (2005). Energy Information Administration, Reactor Status List. Available at: http://www.eia.doe.gov/cneaf/nuclear/page/nuc_reactors/reactsum.html. United States Energy Information Administration. Washington, D.C.

EPRI (2003a). Interim Storage of Greater Than Class C Low Level Waste, Rev. 1. Electric Power Research Institute. Palo Alto, CA.

EPRI (2003b). Radiological Characterizations for Reactor Pressure Vessels and Internals Enhanced SAFSTOR. Electric Power Research Institute. Palo Alto, CA.

EPRI (2005). Naughton, Mike. Personal Communication from EPRI. Electric Power Research Institute. Palo Alto, CA.

Hillesheim, M. and J. R. Schemerhorn (2007). Activated Metal Canister Volume and Weight Calculations in Support of the Greater-Than-Class-C Low-Level Radioactive Waste Environmental Impact Statement Evaluations. ERMS 546591. Sandia National Laboratories. Carlsbad, NM.

KAPL (2002). Nuclides and Isotopes, Chart of the Nuclides. Sixteenth Edition. KAPL, Inc.

Leigh, C. D. and J. R. Trone (2007). Package Configuration for Disposing of Nuclear Utility Greater-Than-Class-C Low-Level Radioactive Waste in the Waste Isolation Pilot Plant (WIPP). ERMS pending. Sandia National Laboratories. Carlsbad, NM.

NRC (1978). NUREG/CR-0130; Technology, Safety, and Costs of Decommissioning a Reference Pressurized Water Reactor Power Station. Nuclear Regulatory Commission. Washington, D.C.

NRC (1980). NUREG/CR-0672; Technology, Safety, and Costs of Decommissioning a Reference Boiling Water Reactor Power Station. Nuclear Regulatory Commission. Washington, D.C.

NRC (1993). NUREG/CR-5884; PNL-8742. Revised Analysis of Decommissioning for the Reference Pressurized Water Reactor Power Station. Nuclear Regulatory Commission. Washington, D.C.

NRC (1996a). NUREG-1437; Generic Environmental Impact Statement for License Renewal of Nuclear Power Plants. Vol. 1 Chapter 7, Section 7.2.4. Nuclear Regulatory Commission. Washington, D.C.

NRC (1996b). NUREG/CR-6174; PNL-9975. Revised Analysis of Decommissioning for the Reference Boiling Water Reactor Power Station. Nuclear Regulatory Commission. Washington, D.C.

NRC (2006a). Backgrounder on Reactor License Renewal. Available at: http://www.nrc.gov/reading-rm/doc-collections/fact-sheets/license-renewal-bg.html. Nuclear Regulatory Commission. Washington, D.C.

NRC (2006b). Certificate of Compliance for Radioactive Material Packages, NAC-STC, Certificate Number 9235, Revision 9. ERMS 546230. Nuclear Regulator Commission. Washington, D.C.

NRC (2006c). NUREG-1350; NRC 2006-2007 Information Digest. Vol. 18, Appendix B. ERMS 545189. Nuclear Regulatory Commission. Washington, D. C.

NRC (2007). Certificate of Compliance for Radioactive Material Packages, CNS 3-55, Certificate Number 5805, Revision 24. ERMS 546230. Nuclear Regulator Commission. Washington, D.C.

U. S. Congress (1996). Waste Isolation Pilot Plant Land Withdrawal Act. Public Law 102-579, as amended September 23, 1996 by Public Law 104-201, Subtitle F. U.S. Congress. Washington, D.C.

U. S. DOE (1995). Integrated Data Base Report - 1994: U.S. Spent Nuclear Fuel and Radioactive Waste Inventories, Projections, and Characteristics. DOE/RW-0006 Rev. 11. United States Department of Energy Office of Environmental Management.

U. S. DOE (2006a). Greater Than Class C Low Level Radioactive Waste Inventory Estimates DRAFT. ERMS 545191. United States Department of Energy.

U. S. DOE (2006b). RH 72-B Safety Analysis Report, Revision 4. United States Department of Energy.

Weiner, R. F., D. Osborn and M. Dennis (2007). Supporting Shielding Calculations for the Greater Than Class C Low Level Radioactive Waste Environmental Impact Statement Evaluations, Revision 2. ERMS 546367. Sandia National Laboratories. Albuquerque, NM.

APPENDIX A
ESTIMATED GTCC LLW VOLUMES FOR US REACTORS

GTCC LLW from 120 reactors in the US was included in the analysis. Information on reactor types, electrical capacity, and licensing dates for power plants in the U.S. was taken from *U.S. Nuclear Regulatory Commission (NRC) 2006–2007 Information Digest* (NRC 2006c). NRC (NRC 2006c) reports MWt for reactors which have been shutdown. The MWt is converted to MW(e) by multiplying by .33 (NRC 2006c). The date of shutdown for operational reactors is assumed to be 60 years after the operating license was issued, and it is assumed waste does not become available for disposal until six years after shutdown. For power plants that had been shut down by 2005, the shutdown date is the year the reactor was shutdown, and it is assumed the waste becomes available for disposal by 2019.

The volumes shown in Table A-1 are calculated using the appropriate volume scaling factor, 6.03E-03 m^3/MW(e) for BWRs and 9.40E$^-$03 m^3/MW(e) for PWRs.

TABLE A-1
ESTIMATED GTCC LLW VOLUMES FOR US REACTORS

Reactor	Reactor Number	Capacity MW(e)	State	NRC Region	Reactor Type	Date License Issued	Assumed Shutdown Date	Assumed Date Available for Disposal	Volume (m^3)
Browns Ferry-1	BWR1	1,065	AL	2	BWR	1973	2033	2039	6.42E+00
Browns Ferry-2	BWR2	1,118	AL	2	BWR	1974	2034	2040	6.74E+00
Browns Ferry-3	BWR3	1,114	AL	2	BWR	1976	2036	2042	6.71E+00
Fermi-2	BWR4	1,111	OH	3	BWR	1985	2045	2051	6.69E+00
Hope Creek-1	BWR5	1,049	DE	1	BWR	1986	2046	2052	6.32E+00
Peach Bottom-2	BWR6	1,112	PA	1	BWR	1973	2033	2039	6.70E+00
Peach Bottom-3	BWR7	1,112	PA	1	BWR	1974	2034	2040	6.70E+00
Susquehanna-1	BWR8	1,135	PA	1	BWR	1982	2042	2048	6.84E+00
Susquehanna-2	BWR9	1,140	PA	1	BWR	1984	2044	2050	6.87E+00
Limerick-1	BWR10	1,134	PA	1	BWR	1985	2045	2051	6.83E+00
Limerick-2	BWR11	1,134	PA	1	BWR	1989	2049	2055	6.83E+00
LaSalle County-1	BWR12	1,118	IL	3	BWR	1982	2042	2048	6.74E+00
LaSalle County-2	BWR13	1,120	IL	3	BWR	1983	2043	2049	6.75E+00
Nine Mile Point-2	BWR14	1,135	NY	1	BWR	1987	2047	2053	6.84E+00
Columbia Generating Sta.	BWR15	1,122	WA	4	BWR	1984	2044	2050	6.76E+00
Clinton	BWR16	1,043	IL	3	BWR	1987	2047	2053	6.29E+00
River Bend-1	BWR17	968	LA	4	BWR	1985	2045	2051	5.83E+00
Grand Gulf-1	BWR18	1,270	MS	4	BWR	1984	2044	2050	7.65E+00
Perry-1	BWR19	1,235	OH	3	BWR	1986	2046	2052	7.44E+00
Oyster Creek-1	BWR20	619	NJ	1	BWR	1991	2051	2057	3.73E+00
Nine Mile Point-1	BWR21	621	NY	1	BWR	1974	2034	2040	3.74E+00
Dresden-2	BWR22	867	IL	3	BWR	1991	2051	2057	5.22E+00
Dresden-3	BWR23	867	IL	3	BWR	1971	2031	2037	5.22E+00

TABLE A-1
ESTIMATED GTCC LLW VOLUMES FOR US REACTORS
(continued)

Reactor	Reactor Number	Capacity MW(e)	State	NRC Region	Reactor Type	Date License Issued	Assumed Shutdown Date	Assumed Date Available for Disposal	Volume (m^3)
Quad Cities-1	BWR24	867	IL	3	BWR	1972	2032	2038	5.22E+00
Quad Cities-2	BWR25	867	IL	3	BWR	1972	2032	2038	5.22E+00
Pilgrim-1	BWR26	685	MA	1	BWR	1972	2032	2038	4.13E+00
Monticello	BWR27	569	MN	3	BWR	1981	2041	2047	3.43E+00
Edwin I. Hatch-1	BWR28	869	GA	2	BWR	1974	2034	2040	5.24E+00
Edwin I. Hatch-2	BWR29	883	GA	2	BWR	1978	2038	2044	5.32E+00
Duane Arnold	BWR30	563	IA	3	BWR	1974	2034	2040	3.39E+00
Cooper	BWR31	756	NE	4	BWR	1974	2034	2040	4.56E+00
James Fitzpatrick	BWR32	844	NY	1	BWR	1974	2034	2040	5.09E+00
Brunswick-1	BWR33	938	NC	2	BWR	1976	2036	2042	5.65E+00
Brunswick-2	BWR34	900	NC	2	BWR	1974	2034	2040	5.42E+00
Vermont Yankee-1	BWR35	506	VT	1	BWR	1973	2033	2039	3.05E+00
								Projected BWR Subtotal	**2.02E+02**
Big Rock Point	SBWR1	79	MI	3	BWR	"-"	1997	2019	4.77E-01
Dresden-1	SBWR2	231	IL	3	BWR	"-"	1978	2019	1.39E+00
GE VBWR	SBWR3	17	CA	4	BWR	"-"	1963	2019	1.02E-01
Humboldt Bay-3	SBWR4	66	CA	4	BWR	"-"	1976	2019	3.98E-01
La Crosse	SBWR5	54	WI	3	BWR	"-"	1987	2019	3.28E-01
Millstone-1	SBWR6	664	CT	1	BWR	"-"	1998	2019	4.00E+00
Pathfinder	SBWR7	63	SD	4	BWR	"-"	1967	2019	3.78E-01
								Stored BWR Subtotal	**7.07E+00**
Arkansas Nuclear-1	PWR1	841	AR	4	PWR	1974	2034	2040	7.90E+00
Crystal River-3	PWR2	838	FL	2	PWR	1977	2037	2043	7.87E+00
Davis-Besse	PWR3	873	OH	3	PWR	1977	2037	2043	8.20E+00
Three Mile Island-1	PWR4	810	PA	1	PWR	1974	2034	2040	7.61E+00
Oconee-1	PWR5	846	SC	2	PWR	1973	2033	2039	7.95E+00
Oconee-2	PWR6	846	SC	2	PWR	1973	2033	2039	7.95E+00
Oconee-3	PWR7	846	SC	2	PWR	1974	2034	2040	7.95E+00

TABLE A-1
ESTIMATED GTCC LLW VOLUMES FOR US REACTORS
(continued)

Reactor	Reactor Number	Capacity MW(e)	State	NRC Region	Reactor Type	Date License Issued	Assumed Shutdown Date	Assumed Date Available for Disposal	Volume (m^3)
Turkey Point- 4	PWR8	693	FL	2	PWR	1973	2033	2039	6.51E+00
Turkey Point-3	PWR9	693	FL	2	PWR	1972	2032	2038	6.51E+00
Prairie Island-1	PWR10	522	MN	3	PWR	1974	2034	2040	4.90E+00
Prairie Island-2	PWR11	522	MN	3	PWR	1974	2034	2040	4.90E+00
H.B. Robinson-2	PWR12	710	SC	2	PWR	1970	2030	2036	6.67E+00
Point Beach-1	PWR13	512	WI	3	PWR	1970	2030	2036	4.81E+00
Point Beach-2	PWR14	518	WI	3	PWR	1973	2033	2039	4.87E+00
Kewaunee	PWR15	560	WI	3	PWR	1973	2033	2039	5.26E+00
Joseph M. Farley-1	PWR16	851	AL	2	PWR	1977	2037	2043	8.00E+00
Joseph M. Farley-2	PWR17	860	AL	2	PWR	1981	2041	2047	8.08E+00
Diablo Canyon-1	PWR18	1,087	CA	4	PWR	1984	2044	2050	1.02E+01
Diablo Canyon-2	PWR19	1,087	CA	4	PWR	1985	2045	2051	1.02E+01
Millstone-3	PWR20	1,155	CT	1	PWR	1986	2046	2052	1.09E+01
Vogtle-1	PWR21	1,152	GA	2	PWR	1987	2047	2053	1.08E+01
Vogtle-2	PWR22	1,149	GA	2	PWR	1989	2049	2055	1.08E+01
Braidwood-1	PWR23	1,178	IL	3	PWR	1987	2047	2053	1.11E+01
Braidwood-2	PWR24	1,152	IL	3	PWR	1988	2048	2054	1.08E+01
Byron-1	PWR25	1,164	IL	3	PWR	1985	2045	2051	1.09E+01
Byron-2	PWR26	1,136	IL	3	PWR	1987	2047	2053	1.07E+01
Wolf Creek-1	PWR27	1,166	KS	4	PWR	1985	2045	2051	1.10E+01
D.C. Cook-1	PWR28	1,016	MI	3	PWR	1974	2034	2040	9.55E+00
D.C. Cook-2	PWR29	1,077	MI	3	PWR	1977	2037	2043	1.01E+01
Callaway	PWR30	1,137	MO	4	PWR	1984	2044	2050	1.07E+01
Seabrook-1	PWR31	1,159	NH	1	PWR	1990	2050	2056	1.09E+01
Salem-1	PWR32	1,174	DE	1	PWR	1976	2036	2042	1.10E+01
Salem-2	PWR33	1,130	DE	1	PWR	1981	2041	2047	1.06E+01
Indian Point-2	PWR34	979	NY	1	PWR	1973	2033	2039	9.20E+00
Indian Point-3	PWR35	991	NY	1	PWR	1975	2035	2041	9.31E+00

TABLE A-1
ESTIMATED GTCC LLW VOLUMES FOR US REACTORS
(continued)

Reactor	Reactor Number	Capacity MW(e)	State	NRC Region	Reactor Type	Date License Issued	Assumed Shutdown Date	Assumed Date Available for Disposal	Volume (m^3)
Shearon Harris-1	PWR36	900	NC	2	PWR	1987	2047	2053	8.46E+00
McGuire-1	PWR37	1,100	NC	2	PWR	1981	2041	2047	1.03E+01
McGuire-2	PWR38	1,100	NC	2	PWR	1983	2043	2049	1.03E+01
Beaver Valley-1	PWR39	821	PA	1	PWR	1976	2036	2042	7.71E+00
Beaver Valley-2	PWR40	831	PA	1	PWR	1987	2047	2053	7.81E+00
Catawba-1	PWR41	1,129	SC	2	PWR	1985	2045	2051	1.06E+01
Catawba-2	PWR42	1,129	SC	2	PWR	1986	2046	2052	1.06E+01
Summer	PWR43	966	SC	2	PWR	1982	2042	2048	9.08E+00
Sequoyah-1	PWR44	1,150	TN	2	PWR	1980	2040	2046	1.08E+01
Sequoyah-2	PWR45	1,127	TN	2	PWR	1981	2041	2047	1.06E+01
Watts Bar-1	PWR46	1,121	TN	2	PWR	1996	2056	2062	1.05E+01
Comanche Peak-1	PWR47	1,150	TX	4	PWR	1990	2050	2056	1.08E+01
Comanche Peak-2	PWR48	1,150	TX	4	PWR	1993	2053	2059	1.08E+01
South Texas Project-1	PWR49	1,280	TX	4	PWR	1988	2048	2054	1.20E+01
South Texas Project-2	PWR50	1,280	TX	4	PWR	1989	2049	2055	1.20E+01
Surry-1	PWR51	799	VA	2	PWR	1972	2032	2038	7.51E+00
Surry-2	PWR52	799	VA	2	PWR	1973	2033	2039	7.51E+00
North Anna-1	PWR53	925	VA	2	PWR	1978	2038	2044	8.69E+00
North Anna-2	PWR54	917	VA	2	PWR	1980	2040	2046	8.62E+00
Palo Verde-1	PWR55	1,243	AZ	4	PWR	1985	2045	2051	1.17E+01
Palo Verde-2	PWR56	1,314	AZ	4	PWR	1986	2046	2052	1.23E+01
Palo Verde-3	PWR57	1,247	AZ	4	PWR	1987	2047	2053	1.17E+01
Arkansas Nuclear-2	PWR58	996	AR	4	PWR	1978	2038	2044	9.36E+00
San Onofre-2	PWR59	1,070	CA	4	PWR	1982	2042	2048	1.01E+01
San Onofre-3	PWR60	1,080	CA	4	PWR	1983	2043	2049	1.01E+01
Millstone-2	PWR61	882	CT	1	PWR	1975	2035	2041	8.29E+00
St Lucie-1	PWR62	839	FL	2	PWR	1976	2036	2042	7.88E+00
St Lucie-2	PWR63	839	FL	2	PWR	1983	2043	2049	7.88E+00

TABLE A-1
ESTIMATED GTCC LLW VOLUMES FOR US REACTORS
(continued)

Reactor	Reactor Number	Capacity MW(e)	State	NRC Region	Reactor Type	Date License Issued	Assumed Shutdown Date	Assumed Date Available for Disposal	Volume (m^3)
Waterford-3	PWR64	1,087	LA	4	PWR	1985	2045	2051	1.02E+01
Calvert Cliffs-1	PWR65	873	MD	1	PWR	1974	2034	2040	8.20E+00
Calvert Cliffs-2	PWR66	862	MD	1	PWR	1976	2036	2042	8.10E+00
Palisades	PWR67	767	MI	3	PWR	1971	2031	2037	7.21E+00
Fort Calhoun	PWR68	476	NE	4	PWR	1973	2033	2039	4.47E+00
Ginna	PWR69	498	NY	1	PWR	1969	2029	2035	4.68E+00
								Projected PWR Subtotal	**6.22E+02**
Haddam Neck	SPWR1	602	CT	1	PWR	"-"	1996	2019	5.66E+00
Indian Point-1	SPWR2	203	NY	1	PWR	"-"	1974	2019	1.91E+00
Maine Yankee	SPWR3	891	ME	1	PWR	"-"	1996	2019	8.37E+00
Rancho Seco	SPWR4	915	CA	4	PWR	"-"	1989	2019	8.59E+00
San Onofre-1	SPWR5	445	CA	4	PWR	"-"	1992	2019	4.18E+00
Saxton	SPWR6	78	PA	1	PWR	"-"	1972	2019	7.33E-01
Yankee-Rowe	SPWR7	198	MA	1	PWR	"-"	1991	2019	1.86E+00
Zion-1	SPWR8	1,073	IL	3	PWR	"-"	1998	2019	1.01E+01
Zion-2	SPWR9	1,073	IL	3	PWR	"-"	1998	2019	1.01E+01
								Stored PWR Subtotal	**5.15E+01**

APPENDIX B
ESTIMATED GTCC LLW TOTAL ACTIVITIES FOR US REACTORS

GTCC LLW from 120 reactors in the US was included in the analysis. Information on reactor types, electrical capacity, and licensing dates for power plants in the U.S. was taken from *U.S. Nuclear Regulatory Commission (NRC) 2006–2007 Information Digest* (NRC 2006c). The date of shutdown for operational reactors is assumed to be 60 years after the operating license was issued, and it is assumed waste does not become available for disposal until six years after shutdown. For power plants that had been shut down by 2005, the shutdown date is the year the reactor was shutdown, and it is assumed the waste becomes available for disposal by 2019.

The total activity of GTCC LLW at the time of shutdown for each reactor is calculated using the appropriate activity scaling factor, 5.97E+03 Ci/MW(e) for BWRs and 3.65E+03 Ci/MW(e) for PWRs, and shown in Table B-1.

TABLE B-1
ESTIMATED GTCC LLW TOTAL ACTIVITIES FOR US REACTORS

Reactor	Reactor Number	Capacity MW(e)	State	NRC Region	Reactor Type	Date License Issued	Assumed Shutdown Date	Assumed Date Available for Disposal	Activity (Ci)
Browns Ferry-1	BWR1	1,065	AL	2	BWR	1973	2033	2039	6.36E+06
Browns Ferry-2	BWR2	1,118	AL	2	BWR	1974	2034	2040	6.67E+06
Browns Ferry-3	BWR3	1,114	AL	2	BWR	1976	2036	2042	6.65E+06
Fermi-2	BWR4	1,111	OH	3	BWR	1985	2045	2051	6.63E+06
Hope Creek-1	BWR5	1,049	DE	1	BWR	1986	2046	2052	6.26E+06
Peach Bottom-2	BWR6	1,112	PA	1	BWR	1973	2033	2039	6.64E+06
Peach Bottom-3	BWR7	1,112	PA	1	BWR	1974	2034	2040	6.64E+06
Susquehanna-1	BWR8	1,135	PA	1	BWR	1982	2042	2048	6.77E+06
Susquehanna-2	BWR9	1,140	PA	1	BWR	1984	2044	2050	6.80E+06
Limerick-1	BWR10	1,134	PA	1	BWR	1985	2045	2051	6.77E+06
Limerick-2	BWR11	1,134	PA	1	BWR	1989	2049	2055	6.77E+06
LaSalle County-1	BWR12	1,118	IL	3	BWR	1982	2042	2048	6.67E+06
LaSalle County-2	BWR13	1,120	IL	3	BWR	1983	2043	2049	6.68E+06
Nine Mile Point-2	BWR14	1,135	NY	1	BWR	1987	2047	2053	6.78E+06
Columbia Generating Sta.	BWR15	1,122	WA	4	BWR	1984	2044	2050	6.70E+06
Clinton	BWR16	1,043	IL	3	BWR	1987	2047	2053	6.22E+06
River Bend-1	BWR17	968	LA	4	BWR	1985	2045	2051	5.78E+06
Grand Gulf-1	BWR18	1,270	MS	4	BWR	1984	2044	2050	7.58E+06
Perry-1	BWR19	1,235	OH	3	BWR	1986	2046	2052	7.37E+06
Oyster Creek-1	BWR20	619	NJ	1	BWR	1991	2051	2057	3.69E+06
Nine Mile Point-1	BWR21	621	NY	1	BWR	1974	2034	2040	3.70E+06
Dresden-2	BWR22	867	IL	3	BWR	1991	2051	2057	5.17E+06
Dresden-3	BWR23	867	IL	3	BWR	1971	2031	2037	5.17E+06
Quad Cities-1	BWR24	867	IL	3	BWR	1972	2032	2038	5.17E+06

TABLE B-1
ESTIMATED GTCC LLW TOTAL ACTIVITIES FOR US REACTORS
(continued)

Reactor	Reactor Number	Capacity MW(e)	State	NRC Region	Reactor Type	Date License Issued	Assumed Shutdown Date	Assumed Date Available for Disposal	Activity (Ci)
Quad Cities-2	BWR25	867	IL	3	BWR	1972	2032	2038	5.17E+06
Pilgrim-1	BWR26	685	MA	1	BWR	1972	2032	2038	4.09E+06
Monticello	BWR27	569	MN	3	BWR	1981	2041	2047	3.40E+06
Edwin I. Hatch-1	BWR28	869	GA	2	BWR	1974	2034	2040	5.19E+06
Edwin I. Hatch-2	BWR29	883	GA	2	BWR	1978	2038	2044	5.27E+06
Duane Arnold	BWR30	563	IA	3	BWR	1974	2034	2040	3.36E+06
Cooper	BWR31	756	NE	4	BWR	1974	2034	2040	4.51E+06
James Fitzpatrick	BWR32	844	NY	1	BWR	1974	2034	2040	5.04E+06
Brunswick-1	BWR33	938	NC	2	BWR	1976	2036	2042	5.60E+06
Brunswick-2	BWR34	900	NC	2	BWR	1974	2034	2040	5.37E+06
Vermont Yankee-1	BWR35	506	VT	1	BWR	1973	2033	2039	3.02E+06
								Projected BWR Subtotal	**2.00E+08**
Big Rock Point	SBWR1	79	MI	3	BWR	"-"	1997	2019	4.73E+05
Dresden-1	SBWR2	231	IL	3	BWR	"-"	1978	2019	1.38E+06
GE VBWR	SBWR3	17	CA	4	BWR	"-"	1963	2019	1.01E+05
Humboldt Bay-3	SBWR4	66	CA	4	BWR	"-"	1976	2019	3.94E+05
La Crosse	SBWR5	54	WI	3	BWR	"-"	1987	2019	3.25E+05
Millstone-1	SBWR6	664	CT	1	BWR	"-"	1998	2019	3.96E+06
Pathfinder	SBWR7	63	SD	4	BWR	"-"	1967	2019	3.74E+05
								Stored BWR Subtotal	**7.01E+06**
Arkansas Nuclear-1	PWR1	841	AR	4	PWR	1974	2034	2040	3.07E+06
Crystal River-3	PWR2	838	FL	2	PWR	1977	2037	2043	3.06E+06
Davis-Besse	PWR3	873	OH	3	PWR	1977	2037	2043	3.19E+06
Three Mile Island-1	PWR4	810	PA	1	PWR	1974	2034	2040	2.96E+06
Oconee-1	PWR5	846	SC	2	PWR	1973	2033	2039	3.09E+06
Oconee-2	PWR6	846	SC	2	PWR	1973	2033	2039	3.09E+06
Oconee-3	PWR7	846	SC	2	PWR	1974	2034	2040	3.09E+06
Turkey Point- 4	PWR8	693	FL	2	PWR	1973	2033	2039	2.53E+06

TABLE B-1
ESTIMATED GTCC LLW TOTAL ACTIVITIES FOR US REACTORS
(continued)

Reactor	Reactor Number	Capacity MW(e)	State	NRC Region	Reactor Type	Date License Issued	Assumed Shutdown Date	Assumed Date Available for Disposal	Activity (Ci)
Turkey Point-3	PWR9	693	FL	2	PWR	1972	2032	2038	2.53E+06
Prairie Island-1	PWR10	522	MN	3	PWR	1974	2034	2040	1.91E+06
Prairie Island-2	PWR11	522	MN	3	PWR	1974	2034	2040	1.91E+06
H.B. Robinson-2	PWR12	710	SC	2	PWR	1970	2030	2036	2.59E+06
Point Beach-1	PWR13	512	WI	3	PWR	1970	2030	2036	1.87E+06
Point Beach-2	PWR14	518	WI	3	PWR	1973	2033	2039	1.89E+06
Kewaunee	PWR15	560	WI	3	PWR	1973	2033	2039	2.05E+06
Joseph M. Farley-1	PWR16	851	AL	2	PWR	1977	2037	2043	3.11E+06
Joseph M. Farley-2	PWR17	860	AL	2	PWR	1981	2041	2047	3.14E+06
Diablo Canyon-1	PWR18	1,087	CA	4	PWR	1984	2044	2050	3.97E+06
Diablo Canyon-2	PWR19	1,087	CA	4	PWR	1985	2045	2051	3.97E+06
Millstone-3	PWR20	1,155	CT	1	PWR	1986	2046	2052	4.22E+06
Vogtle-1	PWR21	1,152	GA	2	PWR	1987	2047	2053	4.21E+06
Vogtle-2	PWR22	1,149	GA	2	PWR	1989	2049	2055	4.20E+06
Braidwood-1	PWR23	1,178	IL	3	PWR	1987	2047	2053	4.30E+06
Braidwood-2	PWR24	1,152	IL	3	PWR	1988	2048	2054	4.21E+06
Byron-1	PWR25	1,164	IL	3	PWR	1985	2045	2051	4.25E+06
Byron-2	PWR26	1,136	IL	3	PWR	1987	2047	2053	4.15E+06
Wolf Creek-1	PWR27	1,166	KS	4	PWR	1985	2045	2051	4.26E+06
D.C. Cook-1	PWR28	1,016	MI	3	PWR	1974	2034	2040	3.71E+06
D.C. Cook-2	PWR29	1,077	MI	3	PWR	1977	2037	2043	3.94E+06
Callaway	PWR30	1,137	MO	4	PWR	1984	2044	2050	4.15E+06
Seabrook-1	PWR31	1,159	NH	1	PWR	1990	2050	2056	4.24E+06
Salem-1	PWR32	1,174	DE	1	PWR	1976	2036	2042	4.29E+06
Salem-2	PWR33	1,130	DE	1	PWR	1981	2041	2047	4.13E+06
Indian Point-2	PWR34	979	NY	1	PWR	1973	2033	2039	3.58E+06
Indian Point-3	PWR35	991	NY	1	PWR	1975	2035	2041	3.62E+06
Shearon Harris-1	PWR36	900	NC	2	PWR	1987	2047	2053	3.29E+06

TABLE B-1
ESTIMATED GTCC LLW TOTAL ACTIVITIES FOR US REACTORS
(continued)

Reactor	Reactor Number	Capacity MW(e)	State	NRC Region	Reactor Type	Date License Issued	Assumed Shutdown Date	Assumed Date Available for Disposal	Activity (Ci)
McGuire-1	PWR37	1,100	NC	2	PWR	1981	2041	2047	4.02E+06
McGuire-2	PWR38	1,100	NC	2	PWR	1983	2043	2049	4.02E+06
Beaver Valley-1	PWR39	821	PA	1	PWR	1976	2036	2042	3.00E+06
Beaver Valley-2	PWR40	831	PA	1	PWR	1987	2047	2053	3.04E+06
Catawba-1	PWR41	1,129	SC	2	PWR	1985	2045	2051	4.13E+06
Catawba-2	PWR42	1,129	SC	2	PWR	1986	2046	2052	4.13E+06
Summer	PWR43	966	SC	2	PWR	1982	2042	2048	3.53E+06
Sequoyah-1	PWR44	1,150	TN	2	PWR	1980	2040	2046	4.20E+06
Sequoyah-2	PWR45	1,127	TN	2	PWR	1981	2041	2047	4.12E+06
Watts Bar-1	PWR46	1,121	TN	2	PWR	1996	2056	2062	4.10E+06
Comanche Peak-1	PWR47	1,150	TX	4	PWR	1990	2050	2056	4.20E+06
Comanche Peak-2	PWR48	1,150	TX	4	PWR	1993	2053	2059	4.20E+06
South Texas Project-1	PWR49	1,280	TX	4	PWR	1988	2048	2054	4.68E+06
South Texas Project-2	PWR50	1,280	TX	4	PWR	1989	2049	2055	4.68E+06
Surry-1	PWR51	799	VA	2	PWR	1972	2032	2038	2.92E+06
Surry-2	PWR52	799	VA	2	PWR	1973	2033	2039	2.92E+06
North Anna-1	PWR53	925	VA	2	PWR	1978	2038	2044	3.38E+06
North Anna-2	PWR54	917	VA	2	PWR	1980	2040	2046	3.35E+06
Palo Verde-1	PWR55	1,243	AZ	4	PWR	1985	2045	2051	4.54E+06
Palo Verde-2	PWR56	1,314	AZ	4	PWR	1986	2046	2052	4.80E+06
Palo Verde-3	PWR57	1,247	AZ	4	PWR	1987	2047	2053	4.56E+06
Arkansas Nuclear-2	PWR58	996	AR	4	PWR	1978	2038	2044	3.64E+06
San Onofre-2	PWR59	1,070	CA	4	PWR	1982	2042	2048	3.91E+06
San Onofre-3	PWR60	1,080	CA	4	PWR	1983	2043	2049	3.95E+06
Millstone-2	PWR61	882	CT	1	PWR	1975	2035	2041	3.22E+06
St Lucie-1	PWR62	839	FL	2	PWR	1976	2036	2042	3.07E+06
St Lucie-2	PWR63	839	FL	2	PWR	1983	2043	2049	3.07E+06
Waterford-3	PWR64	1,087	LA	4	PWR	1985	2045	2051	3.97E+06

TABLE B-1
ESTIMATED GTCC LLW TOTAL ACTIVITIES FOR US REACTORS
(continued)

Reactor	Reactor Number	Capacity MW(e)	State	NRC Region	Reactor Type	Date License Issued	Assumed Shutdown Date	Assumed Date Available for Disposal	Activity (Ci)
Calvert Cliffs-1	PWR65	873	MD	1	PWR	1974	2034	2040	3.19E+06
Calvert Cliffs-2	PWR66	862	MD	1	PWR	1976	2036	2042	3.15E+06
Palisades	PWR67	767	MI	3	PWR	1971	2031	2037	2.80E+06
Fort Calhoun	PWR68	476	NE	4	PWR	1973	2033	2039	1.74E+06
Ginna	PWR69	498	NY	1	PWR	1969	2029	2035	1.82E+06
								Projected PWR Subtotal	**2.42E+08**
Haddam Neck	SPWR1	602	CT	1	PWR	"-"	1996	2019	2.20E+06
Indian Point-1	SPWR2	203	NY	1	PWR	"-"	1974	2019	7.42E+05
Maine Yankee	SPWR3	891	ME	1	PWR	"-"	1996	2019	3.26E+06
Rancho Seco	SPWR4	915	CA	4	PWR	"-"	1989	2019	3.34E+06
San Onofre-1	SPWR5	445	CA	4	PWR	"-"	1992	2019	1.62E+06
Saxton	SPWR6	78	PA	1	PWR	"-"	1972	2019	2.85E+05
Yankee-Rowe	SPWR7	198	MA	1	PWR	"-"	1991	2019	7.23E+05
Zion-1	SPWR8	1,073	IL	3	PWR	"-"	1998	2019	3.92E+06
Zion-2	SPWR9	1,073	IL	3	PWR	"-"	1998	2019	3.92E+06
								Stored PWR Subtotal	**2.00E+07**

APPENDIX C
ESTIMATED GTCC LLW RADIONUCLIDE ACTIVITIES AT SHUTDOWN FOR US REACTORS

The values shown in Table C.1 were calculated as described in Sections 3.1.1 and 3.1.2.

TABLE C-1
ESTIMATED GTCC LLW RADIONUCLIDE ACTIVITIES AT SHUTDOWN FOR US REACTORS

Reactor	Reactor Number	Activity (Ci)								
		Total	C-14	Mn-54	Fe-55	Ni-59	Co-60	Ni-63	Mo-93	Nb-94
Browns Ferry 1	BWR1	6.36E+06	2.34E+02	1.89E+04	2.05E+06	1.42E+03	7.48E+05	1.95E+05	7.26E-01	3.34E+00
Browns Ferry 2	BWR2	6.67E+06	2.45E+02	1.99E+04	2.16E+06	1.49E+03	7.85E+05	2.05E+05	7.62E-01	3.51E+00
Browns Ferry 3	BWR3	6.65E+06	2.45E+02	1.98E+04	2.15E+06	1.48E+03	7.83E+05	2.04E+05	7.59E-01	3.49E+00
Fermi 2	BWR4	6.63E+06	2.44E+02	1.97E+04	2.14E+06	1.48E+03	7.80E+05	2.03E+05	7.57E-01	3.48E+00
Hope Creek 1	BWR5	6.26E+06	2.30E+02	1.86E+04	2.02E+06	1.39E+03	7.37E+05	1.92E+05	7.15E-01	3.29E+00
Peach Bottom 2	BWR6	6.64E+06	2.44E+02	1.98E+04	2.14E+06	1.48E+03	7.81E+05	2.03E+05	7.58E-01	3.49E+00
Peach Bottom 3	BWR7	6.64E+06	2.44E+02	1.98E+04	2.14E+06	1.48E+03	7.81E+05	2.03E+05	7.58E-01	3.49E+00
Susquehanna 1	BWR8	6.77E+06	2.49E+02	2.02E+04	2.19E+06	1.51E+03	7.97E+05	2.08E+05	7.74E-01	3.56E+00
Susquehanna 2	BWR9	6.80E+06	2.50E+02	2.03E+04	2.20E+06	1.52E+03	8.01E+05	2.09E+05	7.77E-01	3.58E+00
Limerick 1	BWR10	6.77E+06	2.49E+02	2.02E+04	2.19E+06	1.51E+03	7.97E+05	2.07E+05	7.73E-01	3.56E+00
Limerick 2	BWR11	6.77E+06	2.49E+02	2.02E+04	2.19E+06	1.51E+03	7.97E+05	2.07E+05	7.73E-01	3.56E+00
LaSalle County 1	BWR12	6.67E+06	2.45E+02	1.99E+04	2.16E+06	1.49E+03	7.85E+05	2.05E+05	7.62E-01	3.51E+00
LaSalle County 2	BWR13	6.68E+06	2.46E+02	1.99E+04	2.16E+06	1.49E+03	7.87E+05	2.05E+05	7.63E-01	3.51E+00
Nine Mile Point 2	BWR14	6.78E+06	2.49E+02	2.02E+04	2.19E+06	1.51E+03	7.97E+05	2.08E+05	7.74E-01	3.56E+00
Columbia Generating Sta.	BWR15	6.70E+06	2.46E+02	1.99E+04	2.16E+06	1.49E+03	7.88E+05	2.05E+05	7.65E-01	3.52E+00
Clinton	BWR16	6.22E+06	2.29E+02	1.85E+04	2.01E+06	1.39E+03	7.33E+05	1.91E+05	7.11E-01	3.27E+00
River Bend 1	BWR17	5.78E+06	2.13E+02	1.72E+04	1.87E+06	1.29E+03	6.80E+05	1.77E+05	6.60E-01	3.04E+00
Grand Gulf 1	BWR18	7.58E+06	2.79E+02	2.26E+04	2.45E+06	1.69E+03	8.92E+05	2.32E+05	8.66E-01	3.98E+00
Perry 1	BWR19	7.37E+06	2.71E+02	2.19E+04	2.38E+06	1.64E+03	8.68E+05	2.26E+05	8.42E-01	3.87E+00
Oyster Creek 1	BWR20	3.69E+06	1.36E+02	1.10E+04	1.19E+06	8.23E+02	4.35E+05	1.13E+05	4.22E-01	1.94E+00
Nine Mile Point 1	BWR21	3.70E+06	1.36E+02	1.10E+04	1.20E+06	8.25E+02	4.36E+05	1.14E+05	4.23E-01	1.95E+00
Dresden 2	BWR22	5.17E+06	1.90E+02	1.54E+04	1.67E+06	1.15E+03	6.09E+05	1.59E+05	5.91E-01	2.72E+00

TABLE C-1
ESTIMATED GTCC LLW RADIONUCLIDE ACTIVITIES AT SHUTDOWN FOR US REACTORS
(continued)

Reactor	Reactor Number	Activity (Ci)								
		Total	C-14	Mn-54	Fe-55	Ni-59	Co-60	Ni-63	Mo-93	Nb-94
Dresden 3	BWR23	5.17E+06	1.90E+02	1.54E+04	1.67E+06	1.15E+03	6.09E+05	1.59E+05	5.91E-01	2.72E+00
Quad Cities 1	BWR24	5.17E+06	1.90E+02	1.54E+04	1.67E+06	1.15E+03	6.09E+05	1.59E+05	5.91E-01	2.72E+00
Quad Cities 2	BWR25	5.17E+06	1.90E+02	1.54E+04	1.67E+06	1.15E+03	6.09E+05	1.59E+05	5.91E-01	2.72E+00
Pilgrim 1	BWR26	4.09E+06	1.50E+02	1.22E+04	1.32E+06	9.10E+02	4.81E+05	1.25E+05	4.67E-01	2.15E+00
Monticello	BWR27	3.40E+06	1.25E+02	1.01E+04	1.10E+06	7.57E+02	4.00E+05	1.04E+05	3.88E-01	1.78E+00
Edwin I. Hatch 1	BWR28	5.19E+06	1.91E+02	1.54E+04	1.68E+06	1.16E+03	6.10E+05	1.59E+05	5.92E-01	2.73E+00
Edwin I. Hatch 2	BWR29	5.27E+06	1.94E+02	1.57E+04	1.70E+06	1.17E+03	6.20E+05	1.62E+05	6.02E-01	2.77E+00
Duane Arnold	BWR30	3.36E+06	1.23E+02	1.00E+04	1.08E+06	7.48E+02	3.95E+05	1.03E+05	3.83E-01	1.76E+00
Cooper	BWR31	4.51E+06	1.66E+02	1.34E+04	1.46E+06	1.01E+03	5.31E+05	1.38E+05	5.15E-01	2.37E+00
James Fitzpatrick	BWR32	5.04E+06	1.85E+02	1.50E+04	1.63E+06	1.12E+03	5.93E+05	1.54E+05	5.75E-01	2.65E+00
Brunswick 1	BWR33	5.60E+06	2.06E+02	1.67E+04	1.81E+06	1.25E+03	6.59E+05	1.72E+05	6.39E-01	2.94E+00
Brunswick 2	BWR34	5.37E+06	1.98E+02	1.60E+04	1.73E+06	1.20E+03	6.32E+05	1.65E+05	6.13E-01	2.82E+00
Vermont Yankee 1	BWR35	3.02E+06	1.11E+02	8.99E+03	9.75E+05	6.73E+02	3.55E+05	9.26E+04	3.45E-01	1.59E+00
BWR Subtotal		**2.00E+08**	**7.34E+03**	**5.95E+05**	**6.45E+07**	**4.45E+04**	**2.35E+07**	**6.12E+06**	**2.28E+01**	**1.05E+02**
Big Rock Point	SBWR1	4.73E+05	1.74E+01	1.41E+03	1.53E+05	1.05E+02	5.56E+04	1.45E+04	5.40E-02	2.48E-01
Dresden 1	SBWR2	1.38E+06	5.07E+01	4.11E+03	4.45E+05	3.07E+02	1.62E+05	4.23E+04	1.57E-01	7.24E-01
GE VBWR	SBWR3	1.01E+05	3.73E+00	3.02E+02	3.28E+04	2.26E+01	1.19E+04	3.11E+03	1.16E-02	5.33E-02
Humboldt Bay 3	SBWR4	3.94E+05	1.45E+01	1.17E+03	1.27E+05	8.78E+01	4.64E+04	1.21E+04	4.50E-02	2.07E-01
La Crosse	SBWR5	3.25E+05	1.20E+01	9.68E+02	1.05E+05	7.24E+01	3.83E+04	9.96E+03	3.71E-02	1.71E-01
Millstone 1	SBWR6	3.96E+06	1.46E+02	1.18E+04	1.28E+06	8.82E+02	4.66E+05	1.21E+05	4.52E-01	2.08E+00
Pathfinder	SBWR7	3.74E+05	1.38E+01	1.11E+03	1.21E+05	8.34E+01	4.40E+04	1.15E+04	4.27E-02	1.97E-01
Shutdown BWR Subtotal		**7.01E+06**	**2.58E+02**	**2.09E+04**	**2.26E+06**	**1.56E+03**	**8.25E+05**	**2.15E+05**	**8.00E-01**	**3.68E+00**
Arkansas Nuclear One 1	PWR1	3.07E+06	1.78E+02	7.26E+04	1.53E+06	9.49E+02	1.10E+06	1.44E+05	1.02E+00	5.70E+00
Crystal River 3	PWR2	3.06E+06	1.78E+02	7.24E+04	1.53E+06	9.46E+02	1.10E+06	1.43E+05	1.02E+00	5.68E+00
Davis-Besse	PWR3	3.19E+06	1.85E+02	7.54E+04	1.59E+06	9.85E+02	1.15E+06	1.49E+05	1.06E+00	5.92E+00
Three Mile Island 1	PWR4	2.96E+06	1.72E+02	6.99E+04	1.48E+06	9.14E+02	1.06E+06	1.38E+05	9.87E-01	5.49E+00
Oconee 1	PWR5	3.09E+06	1.79E+02	7.30E+04	1.54E+06	9.55E+02	1.11E+06	1.45E+05	1.03E+00	5.74E+00
Oconee 2	PWR6	3.09E+06	1.79E+02	7.30E+04	1.54E+06	9.55E+02	1.11E+06	1.45E+05	1.03E+00	5.74E+00

TABLE C-1
ESTIMATED GTCC LLW RADIONUCLIDE ACTIVITIES AT SHUTDOWN FOR US REACTORS
(continued)

Reactor	Reactor Number	Activity (Ci)								
		Total	C-14	Mn-54	Fe-55	Ni-59	Co-60	Ni-63	Mo-93	Nb-94
Oconee 3	PWR7	3.09E+06	1.79E+02	7.30E+04	1.54E+06	9.55E+02	1.11E+06	1.45E+05	1.03E+00	5.74E+00
Turkey Point 4	PWR8	2.53E+06	1.47E+02	5.98E+04	1.26E+06	7.82E+02	9.09E+05	1.18E+05	8.44E-01	4.70E+00
Turkey Point 3	PWR9	2.53E+06	1.47E+02	5.98E+04	1.26E+06	7.82E+02	9.09E+05	1.18E+05	8.44E-01	4.70E+00
Prairie Island 1	PWR10	1.91E+06	1.11E+02	4.51E+04	9.52E+05	5.89E+02	6.85E+05	8.92E+04	6.36E-01	3.54E+00
Prairie Island 2	PWR11	1.91E+06	1.11E+02	4.51E+04	9.52E+05	5.89E+02	6.85E+05	8.92E+04	6.36E-01	3.54E+00
H.B. Robinson 2	PWR12	2.59E+06	1.51E+02	6.13E+04	1.29E+06	8.01E+02	9.32E+05	1.21E+05	8.65E-01	4.82E+00
Point Beach 1	PWR13	1.87E+06	1.09E+02	4.42E+04	9.34E+05	5.78E+02	6.72E+05	8.75E+04	6.24E-01	3.47E+00
Point Beach 2	PWR14	1.89E+06	1.10E+02	4.47E+04	9.45E+05	5.85E+02	6.80E+05	8.85E+04	6.31E-01	3.51E+00
Kewaunee	PWR15	2.05E+06	1.19E+02	4.83E+04	1.02E+06	6.32E+02	7.35E+05	9.57E+04	6.82E-01	3.80E+00
Joseph M. Farley 1	PWR16	3.11E+06	1.81E+02	7.35E+04	1.55E+06	9.61E+02	1.12E+06	1.45E+05	1.04E+00	5.77E+00
Joseph M. Farley 2	PWR17	3.14E+06	1.82E+02	7.42E+04	1.57E+06	9.71E+02	1.13E+06	1.47E+05	1.05E+00	5.83E+00
Diablo Canyon 1	PWR18	3.97E+06	2.31E+02	9.38E+04	1.98E+06	1.23E+03	1.43E+06	1.86E+05	1.32E+00	7.37E+00
Diablo Canyon 2	PWR19	3.97E+06	2.31E+02	9.38E+04	1.98E+06	1.23E+03	1.43E+06	1.86E+05	1.32E+00	7.37E+00
Millstone 3	PWR20	4.22E+06	2.45E+02	9.97E+04	2.11E+06	1.30E+03	1.52E+06	1.97E+05	1.41E+00	7.83E+00
Vogtle 1	PWR21	4.21E+06	2.44E+02	9.95E+04	2.10E+06	1.30E+03	1.51E+06	1.97E+05	1.40E+00	7.81E+00
Vogtle 2	PWR22	4.20E+06	2.44E+02	9.92E+04	2.10E+06	1.30E+03	1.51E+06	1.96E+05	1.40E+00	7.79E+00
Braidwood 1	PWR23	4.30E+06	2.50E+02	1.02E+05	2.15E+06	1.33E+03	1.55E+06	2.01E+05	1.44E+00	7.99E+00
Braidwood 2	PWR24	4.21E+06	2.44E+02	9.95E+04	2.10E+06	1.30E+03	1.51E+06	1.97E+05	1.40E+00	7.81E+00
Byron 1	PWR25	4.25E+06	2.47E+02	1.00E+05	2.12E+06	1.31E+03	1.53E+06	1.99E+05	1.42E+00	7.89E+00
Byron 2	PWR26	4.15E+06	2.41E+02	9.81E+04	2.07E+06	1.28E+03	1.49E+06	1.94E+05	1.38E+00	7.70E+00
Wolf Creek 1	PWR27	4.26E+06	2.47E+02	1.01E+05	2.13E+06	1.32E+03	1.53E+06	1.99E+05	1.42E+00	7.91E+00
D.C. Cook 1	PWR28	3.71E+06	2.16E+02	8.77E+04	1.85E+06	1.15E+03	1.33E+06	1.74E+05	1.24E+00	6.89E+00
D.C. Cook 2	PWR29	3.94E+06	2.28E+02	9.30E+04	1.96E+06	1.22E+03	1.41E+06	1.84E+05	1.31E+00	7.30E+00
Callaway	PWR30	4.15E+06	2.41E+02	9.82E+04	2.07E+06	1.28E+03	1.49E+06	1.94E+05	1.39E+00	7.71E+00
Seabrook 1	PWR31	4.24E+06	2.46E+02	1.00E+05	2.11E+06	1.31E+03	1.52E+06	1.98E+05	1.41E+00	7.86E+00
Salem 1	PWR32	4.29E+06	2.49E+02	1.01E+05	2.14E+06	1.33E+03	1.54E+06	2.01E+05	1.43E+00	7.96E+00
Salem 2	PWR33	4.13E+06	2.40E+02	9.76E+04	2.06E+06	1.28E+03	1.48E+06	1.93E+05	1.38E+00	7.66E+00
Indian Point 2	PWR34	3.58E+06	2.08E+02	8.45E+04	1.79E+06	1.11E+03	1.28E+06	1.67E+05	1.19E+00	6.64E+00
Indian Point 3	PWR35	3.62E+06	2.10E+02	8.56E+04	1.81E+06	1.12E+03	1.30E+06	1.69E+05	1.21E+00	6.72E+00
Shearon Harris 1	PWR36	3.29E+06	1.91E+02	7.77E+04	1.64E+06	1.02E+03	1.18E+06	1.54E+05	1.10E+00	6.10E+00

TABLE C-1
ESTIMATED GTCC LLW RADIONUCLIDE ACTIVITIES AT SHUTDOWN FOR US REACTORS
(continued)

Reactor	Reactor Number	Activity (Ci)								
		Total	C-14	Mn-54	Fe-55	Ni-59	Co-60	Ni-63	Mo-93	Nb-94
McGuire 1	PWR37	4.02E+06	2.33E+02	9.50E+04	2.01E+06	1.24E+03	1.44E+06	1.88E+05	1.34E+00	7.46E+00
McGuire 2	PWR38	4.02E+06	2.33E+02	9.50E+04	2.01E+06	1.24E+03	1.44E+06	1.88E+05	1.34E+00	7.46E+00
Beaver Valley 1	PWR39	3.00E+06	1.74E+02	7.09E+04	1.50E+06	9.27E+02	1.08E+06	1.40E+05	1.00E+00	5.57E+00
Beaver Valley 2	PWR40	3.04E+06	1.76E+02	7.17E+04	1.52E+06	9.38E+02	1.09E+06	1.42E+05	1.01E+00	5.64E+00
Catawba 1	PWR41	4.13E+06	2.39E+02	9.75E+04	2.06E+06	1.27E+03	1.48E+06	1.93E+05	1.38E+00	7.66E+00
Catawba 2	PWR42	4.13E+06	2.39E+02	9.75E+04	2.06E+06	1.27E+03	1.48E+06	1.93E+05	1.38E+00	7.66E+00
Summer	PWR43	3.53E+06	2.05E+02	8.34E+04	1.76E+06	1.09E+03	1.27E+06	1.65E+05	1.18E+00	6.55E+00
Sequoyah 1	PWR44	4.20E+06	2.44E+02	9.93E+04	2.10E+06	1.30E+03	1.51E+06	1.97E+05	1.40E+00	7.80E+00
Sequoyah 2	PWR45	4.12E+06	2.39E+02	9.73E+04	2.05E+06	1.27E+03	1.48E+06	1.93E+05	1.37E+00	7.64E+00
Watts Bar 1	PWR46	4.10E+06	2.38E+02	9.68E+04	2.04E+06	1.27E+03	1.47E+06	1.92E+05	1.37E+00	7.60E+00
Comanche Peak 1	PWR47	4.20E+06	2.44E+02	9.93E+04	2.10E+06	1.30E+03	1.51E+06	1.97E+05	1.40E+00	7.80E+00
Comanche Peak 2	PWR48	4.20E+06	2.44E+02	9.93E+04	2.10E+06	1.30E+03	1.51E+06	1.97E+05	1.40E+00	7.80E+00
South Texas Project 1	PWR49	4.68E+06	2.72E+02	1.11E+05	2.33E+06	1.44E+03	1.68E+06	2.19E+05	1.56E+00	8.68E+00
South Texas Project 2	PWR50	4.68E+06	2.72E+02	1.11E+05	2.33E+06	1.44E+03	1.68E+06	2.19E+05	1.56E+00	8.68E+00
Surry 1	PWR51	2.92E+06	1.69E+02	6.90E+04	1.46E+06	9.02E+02	1.05E+06	1.37E+05	9.74E-01	5.42E+00
Surry 2	PWR52	2.92E+06	1.69E+02	6.90E+04	1.46E+06	9.02E+02	1.05E+06	1.37E+05	9.74E-01	5.42E+00
North Anna 1	PWR53	3.38E+06	1.96E+02	7.99E+04	1.69E+06	1.04E+03	1.21E+06	1.58E+05	1.13E+00	6.27E+00
North Anna 2	PWR54	3.35E+06	1.95E+02	7.92E+04	1.67E+06	1.04E+03	1.20E+06	1.57E+05	1.12E+00	6.22E+00
Palo Verde 1	PWR55	4.54E+06	2.64E+02	1.07E+05	2.27E+06	1.40E+03	1.63E+06	2.12E+05	1.51E+00	8.43E+00
Palo Verde 2	PWR56	4.80E+06	2.79E+02	1.13E+05	2.40E+06	1.48E+03	1.72E+06	2.25E+05	1.60E+00	8.91E+00
Palo Verde 3	PWR57	4.56E+06	2.65E+02	1.08E+05	2.27E+06	1.41E+03	1.64E+06	2.13E+05	1.52E+00	8.46E+00
Arkansas Nuclear One 2	PWR58	3.64E+06	2.11E+02	8.60E+04	1.82E+06	1.12E+03	1.31E+06	1.70E+05	1.21E+00	6.76E+00
San Onofre 2	PWR59	3.91E+06	2.27E+02	9.24E+04	1.95E+06	1.21E+03	1.40E+06	1.83E+05	1.30E+00	7.26E+00
San Onofre 3	PWR60	3.95E+06	2.29E+02	9.32E+04	1.97E+06	1.22E+03	1.42E+06	1.85E+05	1.32E+00	7.32E+00
Millstone 2	PWR61	3.22E+06	1.87E+02	7.62E+04	1.61E+06	9.96E+02	1.16E+06	1.51E+05	1.07E+00	5.98E+00
St Lucie 1	PWR62	3.07E+06	1.78E+02	7.24E+04	1.53E+06	9.47E+02	1.10E+06	1.43E+05	1.02E+00	5.69E+00
St Lucie 2	PWR63	3.07E+06	1.78E+02	7.24E+04	1.53E+06	9.47E+02	1.10E+06	1.43E+05	1.02E+00	5.69E+00
Waterford 3	PWR64	3.97E+06	2.31E+02	9.38E+04	1.98E+06	1.23E+03	1.43E+06	1.86E+05	1.32E+00	7.37E+00
Calvert Cliffs 1	PWR65	3.19E+06	1.85E+02	7.54E+04	1.59E+06	9.85E+02	1.15E+06	1.49E+05	1.06E+00	5.92E+00

TABLE C-1
ESTIMATED GTCC LLW RADIONUCLIDE ACTIVITIES AT SHUTDOWN FOR US REACTORS
(continued)

Reactor	Reactor Number	Activity (Ci)								
		Total	C-14	Mn-54	Fe-55	Ni-59	Co-60	Ni-63	Mo-93	Nb-94
Calvert Cliffs 2	PWR66	3.15E+06	1.83E+02	7.44E+04	1.57E+06	9.73E+02	1.13E+06	1.47E+05	1.05E+00	5.85E+00
Palisades	PWR67	2.80E+06	1.63E+02	6.62E+04	1.40E+06	8.66E+02	1.01E+06	1.31E+05	9.35E-01	5.20E+00
Fort Calhoun	PWR68	1.74E+06	1.01E+02	4.11E+04	8.68E+05	5.37E+02	6.25E+05	8.14E+04	5.80E-01	3.23E+00
Ginna	PWR69	1.82E+06	1.06E+02	4.30E+04	9.07E+05	5.62E+02	6.53E+05	8.51E+04	6.06E-01	3.38E+00
PWR Subtotal		**2.42E+08**	**1.40E+04**	**5.71E+06**	**1.21E+08**	**7.47E+04**	**8.68E+07**	**1.13E+07**	**8.06E+01**	**4.49E+02**
Haddam Neck	SPWR1	2.20E+06	1.28E+02	5.20E+04	1.10E+06	6.80E+02	7.90E+05	1.03E+05	7.34E-01	4.08E+00
Indian Point 1	SPWR2	7.42E+05	4.31E+01	1.75E+04	3.70E+05	2.29E+02	2.66E+05	3.47E+04	2.47E-01	1.38E+00
Maine Yankee	SPWR3	3.26E+06	1.89E+02	7.69E+04	1.62E+06	1.01E+03	1.17E+06	1.52E+05	1.09E+00	6.04E+00
Rancho Seco	SPWR4	3.34E+06	1.94E+02	7.90E+04	1.67E+06	1.03E+03	1.20E+06	1.56E+05	1.11E+00	6.20E+00
San Onofre 1	SPWR5	1.62E+06	9.43E+01	3.84E+04	8.11E+05	5.02E+02	5.83E+05	7.60E+04	5.42E-01	3.01E+00
Saxton	SPWR6	2.85E+05	1.65E+01	6.73E+03	1.42E+05	8.80E+01	1.02E+05	1.33E+04	9.50E-02	5.29E-01
Yankee-Rowe	SPWR7	7.23E+05	4.20E+01	1.71E+04	3.61E+05	2.23E+02	2.60E+05	3.38E+04	2.41E-01	1.34E+00
Zion 1	SPWR8	3.92E+06	2.28E+02	9.26E+04	1.96E+06	1.21E+03	1.41E+06	1.83E+05	1.31E+00	7.27E+00
Zion 2	SPWR9	3.92E+06	2.28E+02	9.26E+04	1.96E+06	1.21E+03	1.41E+06	1.83E+05	1.31E+00	7.27E+00
Shutdown PWR Subtotal		**2.00E+07**	**1.16E+03**	**4.73E+05**	**9.99E+06**	**6.18E+03**	**7.19E+06**	**9.36E+05**	**6.67E+00**	**3.71E+01**
GRAND TOTAL			**2.28E+04**	**6.80E+06**	**1.97E+08**	**1.27E+05**	**1.18E+08**	**1.86E+07**	**1.11E+02**	**5.95E+02**

APPENDIX D
ESTIMATED GTCC LLW RADIONUCLIDE ACTIVITIES WHEN WASTE IS AVAILABLE FOR DISPOSAL FOR US REACTORS

The values shown in Table D.1 were calculated by decaying the initial fractional radionuclide distributions from Table C.1 using the radioactive decay function (Equation 3). Radionuclide half-lives are from the Chart of the Nuclides (KAPL 2002).

TABLE D-1
ESTIMATED GTCC LLW RADIONUCLIDE ACTIVITIES WHEN WASTE IS AVAILABLE FOR DISPOSAL FOR US REACTORS

Reactor	Reactor Number	Activity (Ci)							
		C-14	Mn-54	Fe-55	Ni-59	Co-60	Ni-63	Mo-93	Nb-94
Browns Ferry 1	BWR1	2.34E+02	1.46E+02	4.48E+05	1.42E+03	3.40E+05	1.87E+05	7.25E-01	3.34E+00
Browns Ferry 2	BWR2	2.45E+02	1.54E+02	4.70E+05	1.49E+03	3.57E+05	1.96E+05	7.61E-01	3.51E+00
Browns Ferry 3	BWR3	2.44E+02	1.53E+02	4.68E+05	1.48E+03	3.56E+05	1.96E+05	7.58E-01	3.49E+00
Fermi 2	BWR4	2.44E+02	1.53E+02	4.67E+05	1.48E+03	3.55E+05	1.95E+05	7.56E-01	3.48E+00
Hope Creek 1	BWR5	2.30E+02	1.44E+02	4.41E+05	1.39E+03	3.35E+05	1.84E+05	7.14E-01	3.29E+00
Peach Bottom 2	BWR6	2.44E+02	1.53E+02	4.67E+05	1.48E+03	3.55E+05	1.95E+05	7.57E-01	3.49E+00
Peach Bottom 3	BWR7	2.44E+02	1.53E+02	4.67E+05	1.48E+03	3.55E+05	1.95E+05	7.57E-01	3.49E+00
Susquehanna 1	BWR8	2.49E+02	1.56E+02	4.77E+05	1.51E+03	3.62E+05	1.99E+05	7.73E-01	3.56E+00
Susquehanna 2	BWR9	2.50E+02	1.57E+02	4.79E+05	1.52E+03	3.64E+05	2.00E+05	7.76E-01	3.57E+00
Limerick 1	BWR10	2.49E+02	1.56E+02	4.77E+05	1.51E+03	3.62E+05	1.99E+05	7.72E-01	3.56E+00
Limerick 2	BWR11	2.49E+02	1.56E+02	4.77E+05	1.51E+03	3.62E+05	1.99E+05	7.72E-01	3.56E+00
LaSalle County 1	BWR12	2.45E+02	1.54E+02	4.70E+05	1.49E+03	3.57E+05	1.96E+05	7.61E-01	3.51E+00
LaSalle County 2	BWR13	2.46E+02	1.54E+02	4.71E+05	1.49E+03	3.58E+05	1.97E+05	7.62E-01	3.51E+00
Nine Mile Point 2	BWR14	2.49E+02	1.56E+02	4.77E+05	1.51E+03	3.62E+05	1.99E+05	7.73E-01	3.56E+00
Columbia Generating Sta.	BWR15	2.46E+02	1.54E+02	4.72E+05	1.49E+03	3.58E+05	1.97E+05	7.64E-01	3.52E+00
Clinton	BWR16	2.29E+02	1.43E+02	4.38E+05	1.39E+03	3.33E+05	1.83E+05	7.10E-01	3.27E+00
River Bend 1	BWR17	2.12E+02	1.33E+02	4.07E+05	1.29E+03	3.09E+05	1.70E+05	6.59E-01	3.04E+00
Grand Gulf 1	BWR18	2.79E+02	1.74E+02	5.34E+05	1.69E+03	4.05E+05	2.23E+05	8.65E-01	3.98E+00
Perry 1	BWR19	2.71E+02	1.70E+02	5.19E+05	1.64E+03	3.94E+05	2.17E+05	8.41E-01	3.87E+00
Oyster Creek 1	BWR20	1.36E+02	8.50E+01	2.60E+05	8.23E+02	1.98E+05	1.09E+05	4.21E-01	1.94E+00
Nine Mile Point 1	BWR21	1.36E+02	8.52E+01	2.61E+05	8.25E+02	1.98E+05	1.09E+05	4.22E-01	1.95E+00
Dresden 2	BWR22	1.90E+02	1.19E+02	3.64E+05	1.15E+03	2.77E+05	1.52E+05	5.90E-01	2.72E+00
Dresden 3	BWR23	1.90E+02	1.19E+02	3.64E+05	1.15E+03	2.77E+05	1.52E+05	5.90E-01	2.72E+00
Quad Cities 1	BWR24	1.90E+02	1.19E+02	3.64E+05	1.15E+03	2.77E+05	1.52E+05	5.90E-01	2.72E+00
Quad Cities 2	BWR25	1.90E+02	1.19E+02	3.64E+05	1.15E+03	2.77E+05	1.52E+05	5.90E-01	2.72E+00
Pilgrim 1	BWR26	1.50E+02	9.40E+01	2.88E+05	9.10E+02	2.19E+05	1.20E+05	4.66E-01	2.15E+00
Monticello	BWR27	1.25E+02	7.81E+01	2.39E+05	7.57E+02	1.82E+05	9.99E+04	3.87E-01	1.78E+00

TABLE D-1
ESTIMATED GTCC LLW RADIONUCLIDE ACTIVITIES WHEN WASTE IS AVAILABLE FOR DISPOSAL FOR US REACTORS (continued)

Reactor	Reactor Number	Activity (Ci)							
		C-14	Mn-54	Fe-55	Ni-59	Co-60	Ni-63	Mo-93	Nb-94
Edwin I. Hatch 1	BWR28	1.91E+02	1.19E+02	3.65E+05	1.16E+03	2.77E+05	1.53E+05	5.92E-01	2.72E+00
Edwin I. Hatch 2	BWR29	1.94E+02	1.21E+02	3.71E+05	1.17E+03	2.82E+05	1.55E+05	6.01E-01	2.77E+00
Duane Arnold	BWR30	1.23E+02	7.72E+01	2.36E+05	7.48E+02	1.80E+05	9.88E+04	3.83E-01	1.76E+00
Cooper	BWR31	1.66E+02	1.04E+02	3.18E+05	1.01E+03	2.41E+05	1.33E+05	5.15E-01	2.37E+00
James Fitzpatrick	BWR32	1.85E+02	1.16E+02	3.55E+05	1.12E+03	2.69E+05	1.48E+05	5.75E-01	2.65E+00
Brunswick 1	BWR33	2.06E+02	1.29E+02	3.94E+05	1.25E+03	2.99E+05	1.65E+05	6.39E-01	2.94E+00
Brunswick 2	BWR34	1.97E+02	1.24E+02	3.78E+05	1.20E+03	2.87E+05	1.58E+05	6.13E-01	2.82E+00
Vermont Yankee 1	BWR35	1.11E+02	6.95E+01	2.13E+05	6.73E+02	1.62E+05	8.88E+04	3.44E-01	1.59E+00
BWR Subtotal		**7.34E+03**	**4.59E+03**	**1.41E+07**	**4.45E+04**	**1.07E+07**	**5.87E+06**	**2.28E+01**	**1.05E+02**
Big Rock Point	SBWR1	1.73E+01	2.54E-05	5.73E+02	1.05E+02	3.08E+03	1.25E+04	5.37E-02	2.48E-01
Dresden 1	SBWR2	5.05E+01	1.52E-11	1.34E+01	3.07E+02	7.40E+02	3.19E+04	1.56E-01	7.23E-01
GE VBWR	SBWR3	3.71E+00	5.86E-18	2.20E-02	2.26E+01	7.58E+00	2.12E+03	1.15E-02	5.32E-02
Humboldt Bay 3	SBWR4	1.44E+01	8.57E-13	2.31E+00	8.77E+01	1.63E+02	8.99E+03	4.46E-02	2.07E-01
La Crosse	SBWR5	1.19E+01	5.27E-09	3.11E+01	7.24E+01	5.70E+02	8.00E+03	3.69E-02	1.71E-01
Millstone 1	SBWR6	1.45E+02	4.78E-04	6.19E+03	8.82E+02	2.95E+04	1.05E+05	4.50E-01	2.08E+00
Pathfinder	SBWR7	1.37E+01	5.53E-16	2.24E-01	8.33E+01	4.73E+01	8.03E+03	4.23E-02	1.96E-01
Shutdown BWR Subtotal		**2.57E+02**	**5.03E-04**	**6.81E+03**	**1.56E+03**	**3.41E+04**	**1.77E+05**	**7.96E-01**	**3.68E+00**
Arkansas Nuclear One 1	PWR1	1.78E+02	5.61E+02	3.34E+05	9.49E+02	5.01E+05	1.38E+05	1.02E+00	5.70E+00
Crystal River 3	PWR2	1.78E+02	5.59E+02	3.33E+05	9.46E+02	5.00E+05	1.37E+05	1.02E+00	5.68E+00
Davis-Besse	PWR3	1.85E+02	5.82E+02	3.47E+05	9.85E+02	5.21E+05	1.43E+05	1.06E+00	5.92E+00
Three Mile Island 1	PWR4	1.72E+02	5.40E+02	3.22E+05	9.14E+02	4.83E+05	1.33E+05	9.86E-01	5.49E+00
Oconee 1	PWR5	1.79E+02	5.64E+02	3.36E+05	9.55E+02	5.04E+05	1.39E+05	1.03E+00	5.74E+00
Oconee 2	PWR6	1.79E+02	5.64E+02	3.36E+05	9.55E+02	5.04E+05	1.39E+05	1.03E+00	5.74E+00
Oconee 3	PWR7	1.79E+02	5.64E+02	3.36E+05	9.55E+02	5.04E+05	1.39E+05	1.03E+00	5.74E+00
Turkey Point 4	PWR8	1.47E+02	4.62E+02	2.76E+05	7.82E+02	4.13E+05	1.14E+05	8.43E-01	4.70E+00
Turkey Point 3	PWR9	1.47E+02	4.62E+02	2.76E+05	7.82E+02	4.13E+05	1.14E+05	8.43E-01	4.70E+00
Prairie Island 1	PWR10	1.11E+02	3.48E+02	2.08E+05	5.89E+02	3.11E+05	8.56E+04	6.35E-01	3.54E+00
Prairie Island 2	PWR11	1.11E+02	3.48E+02	2.08E+05	5.89E+02	3.11E+05	8.56E+04	6.35E-01	3.54E+00
H.B. Robinson 2	PWR12	1.51E+02	4.74E+02	2.82E+05	8.01E+02	4.23E+05	1.16E+05	8.64E-01	4.81E+00
Point Beach 1	PWR13	1.09E+02	3.42E+02	2.04E+05	5.78E+02	3.05E+05	8.40E+04	6.23E-01	3.47E+00

TABLE D-1
ESTIMATED GTCC LLW RADIONUCLIDE ACTIVITIES WHEN WASTE IS AVAILABLE FOR DISPOSAL FOR US REACTORS (continued)

Reactor	Reactor Number	Activity (Ci)							
		C-14	Mn-54	Fe-55	Ni-59	Co-60	Ni-63	Mo-93	Nb-94
Point Beach 2	PWR14	1.10E+02	3.46E+02	2.06E+05	5.85E+02	3.09E+05	8.50E+04	6.30E-01	3.51E+00
Kewaunee	PWR15	1.19E+02	3.74E+02	2.23E+05	6.32E+02	3.34E+05	9.19E+04	6.82E-01	3.80E+00
Joseph M. Farley 1	PWR16	1.80E+02	5.68E+02	3.38E+05	9.60E+02	5.07E+05	1.40E+05	1.04E+00	5.77E+00
Joseph M. Farley 2	PWR17	1.82E+02	5.74E+02	3.42E+05	9.71E+02	5.13E+05	1.41E+05	1.05E+00	5.83E+00
Diablo Canyon 1	PWR18	2.30E+02	7.25E+02	4.32E+05	1.23E+03	6.48E+05	1.78E+05	1.32E+00	7.37E+00
Diablo Canyon 2	PWR19	2.30E+02	7.25E+02	4.32E+05	1.23E+03	6.48E+05	1.78E+05	1.32E+00	7.37E+00
Millstone 3	PWR20	2.45E+02	7.70E+02	4.59E+05	1.30E+03	6.89E+05	1.89E+05	1.41E+00	7.83E+00
Vogtle 1	PWR21	2.44E+02	7.68E+02	4.58E+05	1.30E+03	6.87E+05	1.89E+05	1.40E+00	7.81E+00
Vogtle 2	PWR22	2.44E+02	7.66E+02	4.57E+05	1.30E+03	6.85E+05	1.88E+05	1.40E+00	7.79E+00
Braidwood 1	PWR23	2.50E+02	7.86E+02	4.68E+05	1.33E+03	7.02E+05	1.93E+05	1.43E+00	7.99E+00
Braidwood 2	PWR24	2.44E+02	7.68E+02	4.58E+05	1.30E+03	6.87E+05	1.89E+05	1.40E+00	7.81E+00
Byron 1	PWR25	2.47E+02	7.76E+02	4.63E+05	1.31E+03	6.94E+05	1.91E+05	1.42E+00	7.89E+00
Byron 2	PWR26	2.41E+02	7.58E+02	4.52E+05	1.28E+03	6.77E+05	1.86E+05	1.38E+00	7.70E+00
Wolf Creek 1	PWR27	2.47E+02	7.78E+02	4.64E+05	1.32E+03	6.95E+05	1.91E+05	1.42E+00	7.91E+00
D.C. Cook 1	PWR28	2.15E+02	6.78E+02	4.04E+05	1.15E+03	6.06E+05	1.67E+05	1.24E+00	6.89E+00
D.C. Cook 2	PWR29	2.28E+02	7.18E+02	4.28E+05	1.22E+03	6.42E+05	1.77E+05	1.31E+00	7.30E+00
Callaway	PWR30	2.41E+02	7.58E+02	4.52E+05	1.28E+03	6.78E+05	1.87E+05	1.38E+00	7.71E+00
Seabrook 1	PWR31	2.46E+02	7.73E+02	4.61E+05	1.31E+03	6.91E+05	1.90E+05	1.41E+00	7.86E+00
Salem 1	PWR32	2.49E+02	7.83E+02	4.67E+05	1.33E+03	7.00E+05	1.93E+05	1.43E+00	7.96E+00
Salem 2	PWR33	2.40E+02	7.54E+02	4.49E+05	1.28E+03	6.74E+05	1.85E+05	1.38E+00	7.66E+00
Indian Point 2	PWR34	2.08E+02	6.53E+02	3.89E+05	1.10E+03	5.84E+05	1.61E+05	1.19E+00	6.64E+00
Indian Point 3	PWR35	2.10E+02	6.61E+02	3.94E+05	1.12E+03	5.91E+05	1.63E+05	1.21E+00	6.72E+00
Shearon Harris 1	PWR36	1.91E+02	6.00E+02	3.58E+05	1.02E+03	5.37E+05	1.48E+05	1.10E+00	6.10E+00
McGuire 1	PWR37	2.33E+02	7.34E+02	4.37E+05	1.24E+03	6.56E+05	1.80E+05	1.34E+00	7.46E+00
McGuire 2	PWR38	2.33E+02	7.34E+02	4.37E+05	1.24E+03	6.56E+05	1.80E+05	1.34E+00	7.46E+00
Beaver Valley 1	PWR39	1.74E+02	5.48E+02	3.26E+05	9.27E+02	4.90E+05	1.35E+05	9.99E-01	5.57E+00
Beaver Valley 2	PWR40	1.76E+02	5.54E+02	3.30E+05	9.38E+02	4.95E+05	1.36E+05	1.01E+00	5.63E+00
Catawba 1	PWR41	2.39E+02	7.53E+02	4.49E+05	1.27E+03	6.73E+05	1.85E+05	1.37E+00	7.66E+00
Catawba 2	PWR42	2.39E+02	7.53E+02	4.49E+05	1.27E+03	6.73E+05	1.85E+05	1.37E+00	7.66E+00
Summer	PWR43	2.05E+02	6.44E+02	3.84E+05	1.09E+03	5.76E+05	1.58E+05	1.18E+00	6.55E+00

TABLE D-1
ESTIMATED GTCC LLW RADIONUCLIDE ACTIVITIES WHEN WASTE IS AVAILABLE FOR DISPOSAL FOR US REACTORS (continued)

Reactor	Reactor Number	Activity (Ci)							
		C-14	Mn-54	Fe-55	Ni-59	Co-60	Ni-63	Mo-93	Nb-94
Sequoyah 1	PWR44	2.44E+02	7.67E+02	4.57E+05	1.30E+03	6.86E+05	1.89E+05	1.40E+00	7.80E+00
Sequoyah 2	PWR45	2.39E+02	7.52E+02	4.48E+05	1.27E+03	6.72E+05	1.85E+05	1.37E+00	7.64E+00
Watts Bar 1	PWR46	2.38E+02	7.48E+02	4.46E+05	1.27E+03	6.68E+05	1.84E+05	1.36E+00	7.60E+00
Comanche Peak 1	PWR47	2.44E+02	7.67E+02	4.57E+05	1.30E+03	6.86E+05	1.89E+05	1.40E+00	7.80E+00
Comanche Peak 2	PWR48	2.44E+02	7.67E+02	4.57E+05	1.30E+03	6.86E+05	1.89E+05	1.40E+00	7.80E+00
South Texas Project 1	PWR49	2.71E+02	8.54E+02	5.09E+05	1.44E+03	7.63E+05	2.10E+05	1.56E+00	8.68E+00
South Texas Project 2	PWR50	2.71E+02	8.54E+02	5.09E+05	1.44E+03	7.63E+05	2.10E+05	1.56E+00	8.68E+00
Surry 1	PWR51	1.69E+02	5.33E+02	3.18E+05	9.02E+02	4.76E+05	1.31E+05	9.72E-01	5.42E+00
Surry 2	PWR52	1.69E+02	5.33E+02	3.18E+05	9.02E+02	4.76E+05	1.31E+05	9.72E-01	5.42E+00
North Anna 1	PWR53	1.96E+02	6.17E+02	3.68E+05	1.04E+03	5.52E+05	1.52E+05	1.13E+00	6.27E+00
North Anna 2	PWR54	1.94E+02	6.12E+02	3.65E+05	1.03E+03	5.47E+05	1.50E+05	1.12E+00	6.22E+00
Palo Verde 1	PWR55	2.63E+02	8.29E+02	4.94E+05	1.40E+03	7.41E+05	2.04E+05	1.51E+00	8.43E+00
Palo Verde 2	PWR56	2.79E+02	8.76E+02	5.22E+05	1.48E+03	7.83E+05	2.16E+05	1.60E+00	8.91E+00
Palo Verde 3	PWR57	2.64E+02	8.32E+02	4.96E+05	1.41E+03	7.44E+05	2.05E+05	1.52E+00	8.46E+00
Arkansas Nuclear One 2	PWR58	2.11E+02	6.64E+02	3.96E+05	1.12E+03	5.94E+05	1.63E+05	1.21E+00	6.75E+00
San Onofre 2	PWR59	2.27E+02	7.14E+02	4.25E+05	1.21E+03	6.38E+05	1.76E+05	1.30E+00	7.26E+00
San Onofre 3	PWR60	2.29E+02	7.20E+02	4.29E+05	1.22E+03	6.44E+05	1.77E+05	1.31E+00	7.32E+00
Millstone 2	PWR61	1.87E+02	5.88E+02	3.51E+05	9.96E+02	5.26E+05	1.45E+05	1.07E+00	5.98E+00
St Lucie 1	PWR62	1.78E+02	5.60E+02	3.34E+05	9.47E+02	5.00E+05	1.38E+05	1.02E+00	5.69E+00
St Lucie 2	PWR63	1.78E+02	5.60E+02	3.34E+05	9.47E+02	5.00E+05	1.38E+05	1.02E+00	5.69E+00
Waterford 3	PWR64	2.30E+02	7.25E+02	4.32E+05	1.23E+03	6.48E+05	1.78E+05	1.32E+00	7.37E+00
Calvert Cliffs 1	PWR65	1.85E+02	5.82E+02	3.47E+05	9.85E+02	5.21E+05	1.43E+05	1.06E+00	5.92E+00
Calvert Cliffs 2	PWR66	1.83E+02	5.75E+02	3.43E+05	9.73E+02	5.14E+05	1.41E+05	1.05E+00	5.85E+00
Palisades	PWR67	1.63E+02	5.12E+02	3.05E+05	8.66E+02	4.57E+05	1.26E+05	9.33E-01	5.20E+00
Fort Calhoun	PWR68	1.01E+02	3.18E+02	1.89E+05	5.37E+02	2.84E+05	7.81E+04	5.79E-01	3.23E+00
Ginna	PWR69	1.05E+02	3.32E+02	1.98E+05	5.62E+02	2.97E+05	8.16E+04	6.06E-01	3.37E+00
PWR Subtotal		**1.40E+04**	**4.41E+04**	**2.63E+07**	**7.47E+04**	**3.95E+07**	**1.09E+07**	**8.05E+01**	**4.49E+02**
Haddam Neck	SPWR1	1.27E+02	4.17E-04	3.20E+03	6.80E+02	3.84E+04	8.79E+04	7.30E-01	4.08E+00
Indian Point 1	SPWR2	4.28E+01	2.53E-12	4.05E+00	2.29E+02	7.18E+02	2.55E+04	2.45E-01	1.37E+00
Maine Yankee	SPWR3	1.88E+02	6.16E-04	4.73E+03	1.01E+03	5.68E+04	1.30E+05	1.08E+00	6.04E+00

TABLE D-1
ESTIMATED GTCC LLW RADIONUCLIDE ACTIVITIES WHEN WASTE IS AVAILABLE FOR DISPOSAL FOR US REACTORS (continued)

Reactor	Reactor Number	Activity (Ci)							
		C-14	Mn-54	Fe-55	Ni-59	Co-60	Ni-63	Mo-93	Nb-94
Rancho Seco	SPWR4	1.93E+02	2.17E-06	8.22E+02	1.03E+03	2.32E+04	1.27E+05	1.11E+00	6.20E+00
San Onofre 1	SPWR5	9.40E+01	1.20E-05	8.55E+02	5.02E+02	1.68E+04	6.31E+04	5.39E-01	3.01E+00
Saxton	SPWR6	1.65E+01	1.92E-13	9.36E-01	8.80E+01	2.12E+02	9.66E+03	9.42E-02	5.28E-01
Yankee-Rowe	SPWR7	4.19E+01	2.38E-06	2.96E+02	2.23E+02	6.55E+03	2.79E+04	2.40E-01	1.34E+00
Zion 1	SPWR8	2.27E+02	3.75E-03	9.47E+03	1.21E+03	8.90E+04	1.59E+05	1.30E+00	7.27E+00
Zion 2	SPWR9	2.27E+02	3.75E-03	9.47E+03	1.21E+03	8.90E+04	1.59E+05	1.30E+00	7.27E+00
Shutdown PWR Subtot		**1.16E+03**	**8.56E-03**	**2.88E+04**	**6.18E+03**	**3.21E+05**	**7.89E+05**	**6.64E+00**	**3.71E+01**
GRAND TOTAL		**2.28E+04**	**4.87E+04**	**4.04E+07**	**1.27E+05**	**5.05E+07**	**1.77E+07**	**1.11E+02**	**5.94E+02**

APPENDIX E
ESTIMATED GTCC LLW CANISTER NUMBERS FOR US REACTORS

The values shown in Table E.1 were calculated as described in Section 4.

TABLE E-1
ESTIMATED GTCC LLW CANISTER NUMBERS FOR US REACTORS

Reactor	Reactor Number	Capacity MW(e)	State	NRC Region	Reactor Type	Volume (m^3)	Number AMCs (@0.94m^3)	Number SAMCs (@0.30 m^3)	Number h-SAMCs (@ 4023 Ci)	Number RH Canisters (@23 Ci/l)
Browns Ferry-1	BWR1	1,065	AL	2	BWR	6.42E+00	7	22	85	17
Browns Ferry-2	BWR2	1,118	AL	2	BWR	6.74E+00	8	23	89	18
Browns Ferry-3	BWR3	1,114	AL	2	BWR	6.71E+00	8	23	89	18
Fermi-2	BWR4	1,111	OH	3	BWR	6.69E+00	8	23	89	18
Hope Creek-1	BWR5	1,049	DE	1	BWR	6.32E+00	7	22	84	17
Peach Bottom-2	BWR6	1,112	PA	1	BWR	6.70E+00	8	23	89	18
Peach Bottom-3	BWR7	1,112	PA	1	BWR	6.70E+00	8	23	89	18
Susquehanna-1	BWR8	1,135	PA	1	BWR	6.84E+00	8	23	91	18
Susquehanna-2	BWR9	1,140	PA	1	BWR	6.87E+00	8	23	91	18
Limerick-1	BWR10	1,134	PA	1	BWR	6.83E+00	8	23	90	18
Limerick-2	BWR11	1,134	PA	1	BWR	6.83E+00	8	23	90	18
LaSalle County-1	BWR12	1,118	IL	3	BWR	6.74E+00	8	23	89	18
LaSalle County-2	BWR13	1,120	IL	3	BWR	6.75E+00	8	23	89	18
Nine Mile Point-2	BWR14	1,135	NY	1	BWR	6.84E+00	8	23	91	18
Columbia Generating Sta.	BWR15	1,122	WA	4	BWR	6.76E+00	8	23	90	18
Clinton	BWR16	1,043	IL	3	BWR	6.29E+00	7	21	83	17
River Bend-1	BWR17	968	LA	4	BWR	5.83E+00	7	20	77	16
Grand Gulf-1	BWR18	1,270	MS	4	BWR	7.65E+00	9	26	101	20
Perry-1	BWR19	1,235	OH	3	BWR	7.44E+00	8	25	98	20
Oyster Creek-1	BWR20	619	NJ	1	BWR	3.73E+00	4	13	50	10
Nine Mile Point-1	BWR21	621	NY	1	BWR	3.74E+00	4	13	50	10
Dresden-2	BWR22	867	IL	3	BWR	5.22E+00	6	18	69	14
Dresden-3	BWR23	867	IL	3	BWR	5.22E+00	6	18	69	14
Quad Cities-1	BWR24	867	IL	3	BWR	5.22E+00	6	18	69	14

TABLE E-1
ESTIMATED GTCC LLW CANISTER NUMBERS FOR US REACTORS
(continued)

Reactor	Reactor Number	Capacity MW(e)	State	NRC Region	Reactor Type	Volume (m^3)	Number AMCs (@0.94m^3)	Number SAMCs (@0.30m^3)	Number h-SAMCs (@ 4023 Ci)	Number RH Canisters (@23 Ci/l)
Quad Cities-2	BWR25	867	IL	3	BWR	5.22E+00	6	18	69	14
Pilgrim-1	BWR26	685	MA	1	BWR	4.13E+00	5	14	55	11
Monticello	BWR27	569	MN	3	BWR	3.43E+00	4	12	46	9
Edwin I. Hatch-1	BWR28	869	GA	2	BWR	5.24E+00	6	18	69	14
Edwin I. Hatch-2	BWR29	883	GA	2	BWR	5.32E+00	6	18	71	14
Duane Arnold	BWR30	563	IA	3	BWR	3.39E+00	4	12	45	9
Cooper	BWR31	756	NE	4	BWR	4.56E+00	5	16	60	12
James Fitzpatrick	BWR32	844	NY	1	BWR	5.09E+00	6	17	67	14
Brunswick-1	BWR33	938	NC	2	BWR	5.65E+00	7	19	75	15
Brunswick-2	BWR34	900	NC	2	BWR	5.42E+00	6	19	72	15
Vermont Yankee-1	BWR35	506	VT	1	BWR	3.05E+00	4	11	41	8
Projected BWR Subtotal						**2.02E+02**	**234**	**689**	**2671**	**538**
Big Rock Point	SBWR1	79	MI	3	BWR	4.77E-01	1	2	1	1
Dresden-1	SBWR2	231	IL	3	BWR	1.39E+00	2	5	1	1
GE VBWR	SBWR3	17	CA	4	BWR	1.02E-01	1	1	1	1
Humboldt Bay-3	SBWR4	66	CA	4	BWR	3.98E-01	1	2	1	1
La Crosse	SBWR5	54	WI	3	BWR	3.28E-01	1	2	1	1
Millstone-1	SBWR6	664	CT	1	BWR	4.00E+00	5	14	8	2
Pathfinder	SBWR7	63	SD	4	BWR	3.78E-01	1	2	1	1
Stored BWR Subtotal						**7.07E+00**	**12**	**28**	**14**	**8**
Arkansas Nuclear-1	PWR1	841	AR	4	PWR	7.90E+00	9	27	125	25
Crystal River-3	PWR2	838	FL	2	PWR	7.87E+00	9	27	125	25
Davis-Besse	PWR3	873	OH	3	PWR	8.20E+00	9	28	130	26
Three Mile Island-1	PWR4	810	PA	1	PWR	7.61E+00	9	26	121	24
Oconee-1	PWR5	846	SC	2	PWR	7.95E+00	9	27	126	25

TABLE E-1
ESTIMATED GTCC LLW CANISTER NUMBERS FOR US REACTORS
(continued)

Reactor	Reactor Number	Capacity MW(e)	State	NRC Region	Reactor Type	Volume (m^3)	Number AMCs (@0.94m^3)	Number SAMCs (@0.30m^3)	Number h-SAMCs (@ 4023 Ci)	Number RH Canisters (@23 Ci/l)
Oconee-2	PWR6	846	SC	2	PWR	7.95E+00	9	27	126	25
Oconee-3	PWR7	846	SC	2	PWR	7.95E+00	9	27	126	25
Turkey Point- 4	PWR8	693	FL	2	PWR	6.51E+00	7	22	103	21
Turkey Point-3	PWR9	693	FL	2	PWR	6.51E+00	7	22	103	21
Prairie Island-1	PWR10	522	MN	3	PWR	4.90E+00	6	17	78	16
Prairie Island-2	PWR11	522	MN	3	PWR	4.90E+00	6	17	78	16
H.B. Robinson-2	PWR12	710	SC	2	PWR	6.67E+00	8	23	106	21
Point Beach-1	PWR13	512	WI	3	PWR	4.81E+00	6	16	76	15
Point Beach-2	PWR14	518	WI	3	PWR	4.87E+00	6	17	77	16
Kewaunee	PWR15	560	WI	3	PWR	5.26E+00	6	18	83	17
Joseph M. Farley-1	PWR16	851	AL	2	PWR	8.00E+00	9	27	127	25
Joseph M. Farley-2	PWR17	860	AL	2	PWR	8.08E+00	9	27	128	26
Diablo Canyon-1	PWR18	1,087	CA	4	PWR	1.02E+01	11	34	162	32
Diablo Canyon-2	PWR19	1,087	CA	4	PWR	1.02E+01	11	34	162	32
Millstone-3	PWR20	1,155	CT	1	PWR	1.09E+01	12	37	172	34
Vogtle-1	PWR21	1,152	GA	2	PWR	1.08E+01	12	36	171	34
Vogtle-2	PWR22	1,149	GA	2	PWR	1.08E+01	12	36	171	34
Braidwood-1	PWR23	1,178	IL	3	PWR	1.11E+01	12	37	175	35
Braidwood-2	PWR24	1,152	IL	3	PWR	1.08E+01	12	36	171	34
Byron-1	PWR25	1,164	IL	3	PWR	1.09E+01	12	37	173	34
Byron-2	PWR26	1,136	IL	3	PWR	1.07E+01	12	36	169	34
Wolf Creek-1	PWR27	1,166	KS	4	PWR	1.10E+01	12	37	173	34
D.C. Cook-1	PWR28	1,016	MI	3	PWR	9.55E+00	11	32	151	30
D.C. Cook-2	PWR29	1,077	MI	3	PWR	1.01E+01	11	34	160	32
Callaway	PWR30	1,137	MO	4	PWR	1.07E+01	12	36	169	34
Seabrook-1	PWR31	1,159	NH	1	PWR	1.09E+01	12	37	172	34
Salem-1	PWR32	1,174	DE	1	PWR	1.10E+01	12	37	174	35

TABLE E-1
ESTIMATED GTCC LLW CANISTER NUMBERS FOR US REACTORS
(continued)

Reactor	Reactor Number	Capacity MW(e)	State	NRC Region	Reactor Type	Volume (m^3)	Number AMCs (@0.94m^3)	Number SAMCs (@0.30m^3)	Number h-SAMCs (@ 4023 Ci)	Number RH Canisters (@23 Ci/l)
Salem-2	PWR33	1,130	DE	1	PWR	1.06E+01	12	36	168	33
Indian Point-2	PWR34	979	NY	1	PWR	9.20E+00	10	31	146	29
Indian Point-3	PWR35	991	NY	1	PWR	9.31E+00	10	32	147	29
Shearon Harris-1	PWR36	900	NC	2	PWR	8.46E+00	9	29	134	27
McGuire-1	PWR37	1,100	NC	2	PWR	1.03E+01	11	35	164	33
McGuire-2	PWR38	1,100	NC	2	PWR	1.03E+01	11	35	164	33
Beaver Valley-1	PWR39	821	PA	1	PWR	7.71E+00	9	26	122	24
Beaver Valley-2	PWR40	831	PA	1	PWR	7.81E+00	9	26	124	25
Catawba-1	PWR41	1,129	SC	2	PWR	1.06E+01	12	36	168	33
Catawba-2	PWR42	1,129	SC	2	PWR	1.06E+01	12	36	168	33
Summer	PWR43	966	SC	2	PWR	9.08E+00	10	31	144	29
Sequoyah-1	PWR44	1,150	TN	2	PWR	1.08E+01	12	36	171	34
Sequoyah-2	PWR45	1,127	TN	2	PWR	1.06E+01	12	36	168	33
Watts Bar-1	PWR46	1,121	TN	2	PWR	1.05E+01	12	35	167	33
Comanche Peak-1	PWR47	1,150	TX	4	PWR	1.08E+01	12	36	171	34
Comanche Peak-2	PWR48	1,150	TX	4	PWR	1.08E+01	12	40	171	34
South Texas Project-1	PWR49	1,280	TX	4	PWR	1.20E+01	13	40	190	38
South Texas Project-2	PWR50	1,280	TX	4	PWR	1.20E+01	13	25	190	38
Surry-1	PWR51	799	VA	2	PWR	7.51E+00	8	25	119	24
Surry-2	PWR52	799	VA	2	PWR	7.51E+00	8	26	119	24
North Anna-1	PWR53	925	VA	2	PWR	8.69E+00	10	29	138	27
North Anna-2	PWR54	917	VA	2	PWR	8.62E+00	10	29	136	27
Palo Verde-1	PWR55	1,243	AZ	4	PWR	1.17E+01	13	39	185	37
Palo Verde-2	PWR56	1,314	AZ	4	PWR	1.23E+01	14	42	195	39
Palo Verde-3	PWR57	1,247	AZ	4	PWR	1.17E+01	13	39	185	37
Arkansas Nuclear-2	PWR58	996	AR	4	PWR	9.36E+00	10	32	148	30
San Onofre-2	PWR59	1,070	CA	4	PWR	1.01E+01	11	34	159	32

TABLE E-1
ESTIMATED GTCC LLW CANISTER NUMBERS FOR US REACTORS
(continued)

Reactor	Reactor Number	Capacity MW(e)	State	NRC Region	Reactor Type	Volume (m^3)	Number AMCs (@0.94m^3)	Number SAMCs (@0.30m^3)	Number h-SAMCs (@ 4023 Ci)	Number RH Canisters (@23 Ci/l)
San Onofre-3	PWR60	1,080	CA	4	PWR	1.01E+01	11	34	161	32
Millstone-2	PWR61	882	CT	1	PWR	8.29E+00	9	28	131	26
St Lucie-1	PWR62	839	FL	2	PWR	7.88E+00	9	27	125	25
St Lucie-2	PWR63	839	FL	2	PWR	7.88E+00	9	27	125	25
Waterford-3	PWR64	1,087	LA	4	PWR	1.02E+01	11	34	162	32
Calvert Cliffs-1	PWR65	873	MD	1	PWR	8.20E+00	9	28	130	26
Calvert Cliffs-2	PWR66	862	MD	1	PWR	8.10E+00	9	27	128	26
Palisades	PWR67	767	MI	3	PWR	7.21E+00	8	24	114	23
Fort Calhoun	PWR68	476	NE	4	PWR	4.47E+00	5	15	71	14
Ginna	PWR69	498	NY	1	PWR	4.68E+00	5	16	74	15
Projected PWR Subtotal						**6.22E+02**	**692**	**2096**	**9845**	**1964**
Haddam Neck	SPWR1	602	CT	1	PWR	5.66E+00	7	19	29	7
Indian Point-1	SPWR2	203	NY	1	PWR	1.91E+00	3	7	10	3
Maine Yankee	SPWR3	891	ME	1	PWR	8.37E+00	9	28	43	10
Rancho Seco	SPWR4	915	CA	4	PWR	8.59E+00	10	29	44	10
San Onofre-1	SPWR5	445	CA	4	PWR	4.18E+00	5	14	22	5
Saxton	SPWR6	8	PA	1	PWR	7.33E-01	1	3	4	1
Yankee-Rowe	SPWR7	198	MA	1	PWR	1.86E+00	2	7	10	3
Zion-1	SPWR8	1,073	IL	3	PWR	1.01E+01	11	34	52	12
Zion-2	SPWR9	1,073	IL	3	PWR	1.01E+01	11	34	52	12
Stored PWR Subtotal						**5.15E+01**	**59**	**175**	**266**	**63**
GRAND Total						**8.82E+02**	**997**	**2988**	**12796**	**2573**

APPENDIX F
ESTIMATED CONTAINER ACTIVITIES FOR GTCC LLW FROM US REACTORS

The values shown in Tables F.1 and F.2 were calculated by dividing the radionuclide activities from Table D.1 by the number of containers shown in Table E.1.

TABLE F-1
ESTIMATED CONTAINER ACTIVITIES FOR GTCC LLW FROM US REACTORS

Reactor	Reactor Number	No. AMCs	Activity Per Container (Ci/container)							
			C-14	Mn-54	Fe-55	Ni-59	Co-60	Ni-63	Mo-93	Nb-94
Browns Ferry 1	BWR1	7	3.34E+01	2.09E+01	6.39E+04	2.02E+02	4.86E+04	2.67E+04	1.04E-01	4.77E-01
Browns Ferry 2	BWR2	8	3.07E+01	1.92E+01	5.87E+04	1.86E+02	4.46E+04	2.45E+04	9.51E-02	4.38E-01
Browns Ferry 3	BWR3	8	3.05E+01	1.91E+01	5.85E+04	1.85E+02	4.44E+04	2.44E+04	9.48E-02	4.37E-01
Fermi 2	BWR4	8	3.05E+01	1.91E+01	5.84E+04	1.85E+02	4.43E+04	2.44E+04	9.45E-02	4.35E-01
Hope Creek 1	BWR5	7	3.29E+01	2.06E+01	6.30E+04	1.99E+02	4.78E+04	2.63E+04	1.02E-01	4.70E-01
Peach Bottom 2	BWR6	8	3.05E+01	1.91E+01	5.84E+04	1.85E+02	4.44E+04	2.44E+04	9.46E-02	4.36E-01
Peach Bottom 3	BWR7	8	3.05E+01	1.91E+01	5.84E+04	1.85E+02	4.44E+04	2.44E+04	9.46E-02	4.36E-01
Susquehanna 1	BWR8	8	3.11E+01	1.95E+01	5.96E+04	1.89E+02	4.53E+04	2.49E+04	9.66E-02	4.45E-01
Susquehanna 2	BWR9	8	3.13E+01	1.96E+01	5.99E+04	1.89E+02	4.55E+04	2.50E+04	9.70E-02	4.47E-01
Limerick 1	BWR10	8	3.11E+01	1.95E+01	5.96E+04	1.88E+02	4.52E+04	2.49E+04	9.65E-02	4.44E-01
Limerick 2	BWR11	8	3.11E+01	1.95E+01	5.96E+04	1.88E+02	4.52E+04	2.49E+04	9.65E-02	4.44E-01
LaSalle County 1	BWR12	8	3.07E+01	1.92E+01	5.87E+04	1.86E+02	4.46E+04	2.45E+04	9.51E-02	4.38E-01
LaSalle County 2	BWR13	8	3.07E+01	1.92E+01	5.88E+04	1.86E+02	4.47E+04	2.46E+04	9.53E-02	4.39E-01
Nine Mile Point 2	BWR14	8	3.11E+01	1.95E+01	5.96E+04	1.89E+02	4.53E+04	2.49E+04	9.66E-02	4.45E-01
Columbia Generating Sta.	BWR15	8	3.08E+01	1.93E+01	5.90E+04	1.86E+02	4.48E+04	2.46E+04	9.55E-02	4.40E-01
Clinton	BWR16	7	3.27E+01	2.05E+01	6.26E+04	1.98E+02	4.76E+04	2.62E+04	1.01E-01	4.67E-01
River Bend 1	BWR17	7	3.03E+01	1.90E+01	5.81E+04	1.84E+02	4.41E+04	2.43E+04	9.41E-02	4.34E-01
Grand Gulf 1	BWR18	9	3.10E+01	1.94E+01	5.93E+04	1.88E+02	4.50E+04	2.48E+04	9.61E-02	4.42E-01
Perry 1	BWR19	8	3.39E+01	2.12E+01	6.49E+04	2.05E+02	4.93E+04	2.71E+04	1.05E-01	4.84E-01
Oyster Creek 1	BWR20	4	3.39E+01	2.12E+01	6.50E+04	2.06E+02	4.94E+04	2.72E+04	1.05E-01	4.85E-01
Nine Mile Point 1	BWR21	4	3.40E+01	2.13E+01	6.52E+04	2.06E+02	4.95E+04	2.72E+04	1.06E-01	4.86E-01
Dresden 2	BWR22	6	3.17E+01	1.98E+01	6.07E+04	1.92E+02	4.61E+04	2.54E+04	9.84E-02	4.53E-01
Dresden 3	BWR23	6	3.17E+01	1.98E+01	6.07E+04	1.92E+02	4.61E+04	2.54E+04	9.84E-02	4.53E-01
Quad Cities 1	BWR24	6	3.17E+01	1.98E+01	6.07E+04	1.92E+02	4.61E+04	2.54E+04	9.84E-02	4.53E-01
Quad Cities 2	BWR25	6	3.17E+01	1.98E+01	6.07E+04	1.92E+02	4.61E+04	2.54E+04	9.84E-02	4.53E-01
Pilgrim 1	BWR26	5	3.00E+01	1.88E+01	5.76E+04	1.82E+02	4.37E+04	2.40E+04	9.32E-02	4.29E-01
Monticello	BWR27	4	3.12E+01	1.95E+01	5.98E+04	1.89E+02	4.54E+04	2.50E+04	9.68E-02	4.46E-01

TABLE F-1
ESTIMATED CONTAINER ACTIVITIES FOR GTCC LLW FROM US REACTORS
(continued)

Reactor	Reactor Number	No. AMCs	Activity Per Container (Ci/container)							
			C-14	Mn-54	Fe-55	Ni-59	Co-60	Ni-63	Mo-93	Nb-94
Edwin I. Hatch 1	BWR28	6	3.18E+01	1.99E+01	6.09E+04	1.93E+02	4.62E+04	2.54E+04	9.86E-02	4.54E-01
Edwin I. Hatch 2	BWR29	6	3.23E+01	2.02E+01	6.19E+04	1.96E+02	4.70E+04	2.58E+04	1.00E-01	4.61E-01
Duane Arnold	BWR30	4	3.08E+01	1.93E+01	5.91E+04	1.87E+02	4.49E+04	2.47E+04	9.57E-02	4.41E-01
Cooper	BWR31	5	3.32E+01	2.08E+01	6.36E+04	2.01E+02	4.83E+04	2.65E+04	1.03E-01	4.74E-01
James Fitzpatrick	BWR32	6	3.09E+01	1.93E+01	5.91E+04	1.87E+02	4.49E+04	2.47E+04	9.58E-02	4.41E-01
Brunswick 1	BWR33	7	2.94E+01	1.84E+01	5.63E+04	1.78E+02	4.28E+04	2.35E+04	9.12E-02	4.20E-01
Brunswick 2	BWR34	6	3.29E+01	2.06E+01	6.30E+04	1.99E+02	4.79E+04	2.63E+04	1.02E-01	4.70E-01
Vermont Yankee 1	BWR35	4	2.78E+01	1.74E+01	5.32E+04	1.68E+02	4.04E+04	2.22E+04	8.61E-02	3.97E-01
BWR Subtotal		**234**								
Big Rock Point	SBWR1	1	1.73E+01	2.54E-05	5.73E+02	1.05E+02	3.08E+03	1.25E+04	5.37E-02	2.48E-01
Dresden 1	SBWR2	2	2.52E+01	7.59E-12	6.72E+00	1.54E+02	3.70E+02	1.59E+04	7.81E-02	3.62E-01
GE VBWR	SBWR3	1	3.71E+00	5.86E-18	2.20E-02	2.26E+01	7.58E+00	2.12E+03	1.15E-02	5.32E-02
Humboldt Bay 3	SBWR4	1	1.44E+01	8.57E-13	2.31E+00	8.77E+01	1.63E+02	8.99E+03	4.46E-02	2.07E-01
La Crosse	SBWR5	1	1.19E+01	5.27E-09	3.11E+01	7.24E+01	5.70E+02	8.00E+03	3.69E-02	1.71E-01
Millstone 1	SBWR6	5	2.91E+01	9.56E-05	1.24E+03	1.76E+02	5.90E+03	2.10E+04	9.01E-02	4.16E-01
Pathfinder	SBWR7	1	1.37E+01	5.53E-16	2.24E-01	8.33E+01	4.73E+01	8.03E+03	4.23E-02	1.96E-01
Shutdown BWR Subtotal		**12**								
Arkansas Nuclear One 1	PWR1	9	1.98E+01	6.23E+01	3.72E+04	1.05E+02	5.57E+04	1.53E+04	1.14E-01	6.34E-01
Crystal River 3	PWR2	9	1.97E+01	6.21E+01	3.70E+04	1.05E+02	5.55E+04	1.53E+04	1.13E-01	6.31E-01
Davis-Besse	PWR3	9	2.06E+01	6.47E+01	3.86E+04	1.09E+02	5.78E+04	1.59E+04	1.18E-01	6.58E-01
Three Mile Island 1	PWR4	9	1.91E+01	6.00E+01	3.58E+04	1.02E+02	5.37E+04	1.48E+04	1.10E-01	6.10E-01
Oconee 1	PWR5	9	1.99E+01	6.27E+01	3.74E+04	1.06E+02	5.60E+04	1.54E+04	1.14E-01	6.37E-01
Oconee 2	PWR6	9	1.99E+01	6.27E+01	3.74E+04	1.06E+02	5.60E+04	1.54E+04	1.14E-01	6.37E-01
Oconee 3	PWR7	9	1.99E+01	6.27E+01	3.74E+04	1.06E+02	5.60E+04	1.54E+04	1.14E-01	6.37E-01
Turkey Point 4	PWR8	7	2.10E+01	6.60E+01	3.94E+04	1.12E+02	5.90E+04	1.62E+04	1.20E-01	6.71E-01
Turkey Point 3	PWR9	7	2.10E+01	6.60E+01	3.94E+04	1.12E+02	5.90E+04	1.62E+04	1.20E-01	6.71E-01

TABLE F-1
ESTIMATED CONTAINER ACTIVITIES FOR GTCC LLW FROM US REACTORS
(continued)

Reactor	Reactor Number	No. AMCs	Activity Per Container (Ci/container)							
			C-14	Mn-54	Fe-55	Ni-59	Co-60	Ni-63	Mo-93	Nb-94
Prairie Island 1	PWR10	6	1.84E+01	5.80E+01	3.46E+04	9.82E+01	5.19E+04	1.43E+04	1.06E-01	5.90E-01
Prairie Island 2	PWR11	6	1.84E+01	5.80E+01	3.46E+04	9.82E+01	5.19E+04	1.43E+04	1.06E-01	5.90E-01
H.B. Robinson 2	PWR12	8	1.88E+01	5.92E+01	3.53E+04	1.00E+02	5.29E+04	1.46E+04	1.08E-01	6.02E-01
Point Beach 1	PWR1	6	1.81E+01	5.69E+01	3.39E+04	9.63E+01	5.09E+04	1.40E+04	1.04E-01	5.79E-01
Point Beach 2	PWR2	6	1.83E+01	5.76E+01	3.43E+04	9.74E+01	5.15E+04	1.42E+04	1.05E-01	5.85E-01
Kewaunee	PWR3	6	1.98E+01	6.23E+01	3.71E+04	1.05E+02	5.57E+04	1.53E+04	1.14E-01	6.33E-01
Joseph M. Farley 1	PWR4	9	2.00E+01	6.31E+01	3.76E+04	1.07E+02	5.64E+04	1.55E+04	1.15E-01	6.41E-01
Joseph M. Farley 2	PWR5	9	2.03E+01	6.37E+01	3.80E+04	1.08E+02	5.70E+04	1.57E+04	1.16E-01	6.48E-01
Diablo Canyon 1	PWR6	11	2.09E+01	6.59E+01	3.93E+04	1.12E+02	5.89E+04	1.62E+04	1.20E-01	6.70E-01
Diablo Canyon 2	PWR7	11	2.09E+01	6.59E+01	3.93E+04	1.12E+02	5.89E+04	1.62E+04	1.20E-01	6.70E-01
Millstone 3	PWR8	12	2.04E+01	6.42E+01	3.83E+04	1.09E+02	5.74E+04	1.58E+04	1.17E-01	6.53E-01
Vogtle 1	PWR9	12	2.03E+01	6.40E+01	3.82E+04	1.08E+02	5.72E+04	1.57E+04	1.17E-01	6.51E-01
Vogtle 2	PWR10	12	2.03E+01	6.39E+01	3.81E+04	1.08E+02	5.71E+04	1.57E+04	1.17E-01	6.49E-01
Braidwood 1	PWR11	12	2.08E+01	6.55E+01	3.90E+04	1.11E+02	5.85E+04	1.61E+04	1.19E-01	6.66E-01
Braidwood 2	PWR12	12	2.03E+01	6.40E+01	3.82E+04	1.08E+02	5.72E+04	1.57E+04	1.17E-01	6.51E-01
Byron 1	PWR25	12	2.06E+01	6.47E+01	3.86E+04	1.09E+02	5.78E+04	1.59E+04	1.18E-01	6.58E-01
Byron 2	PWR26	12	2.01E+01	6.31E+01	3.76E+04	1.07E+02	5.64E+04	1.55E+04	1.15E-01	6.42E-01
Wolf Creek 1	PWR27	12	2.06E+01	6.48E+01	3.86E+04	1.10E+02	5.79E+04	1.59E+04	1.18E-01	6.59E-01
D.C. Cook 1	PWR28	11	1.96E+01	6.16E+01	3.67E+04	1.04E+02	5.51E+04	1.52E+04	1.12E-01	6.26E-01
D.C. Cook 2	PWR29	11	2.08E+01	6.53E+01	3.89E+04	1.11E+02	5.84E+04	1.61E+04	1.19E-01	6.64E-01
Callaway	PWR30	12	2.01E+01	6.32E+01	3.77E+04	1.07E+02	5.65E+04	1.55E+04	1.15E-01	6.42E-01
Seabrook 1	PWR31	12	2.05E+01	6.44E+01	3.84E+04	1.09E+02	5.76E+04	1.58E+04	1.18E-01	6.55E-01
Salem 1	PWR32	12	2.07E+01	6.53E+01	3.89E+04	1.10E+02	5.83E+04	1.60E+04	1.19E-01	6.63E-01
Salem 2	PWR33	12	2.00E+01	6.28E+01	3.74E+04	1.06E+02	5.61E+04	1.54E+04	1.15E-01	6.39E-01
Indian Point 2	PWR34	10	2.08E+01	6.53E+01	3.89E+04	1.10E+02	5.84E+04	1.61E+04	1.19E-01	6.64E-01
Indian Point 3	PWR35	10	2.10E+01	6.61E+01	3.94E+04	1.12E+02	5.91E+04	1.63E+04	1.21E-01	6.72E-01
Shearon Harris 1	PWR36	9	2.12E+01	6.67E+01	3.98E+04	1.13E+02	5.96E+04	1.64E+04	1.22E-01	6.78E-01
McGuire 1	PWR37	11	2.12E+01	6.67E+01	3.98E+04	1.13E+02	5.96E+04	1.64E+04	1.22E-01	6.78E-01
McGuire 2	PWR38	11	2.12E+01	6.67E+01	3.98E+04	1.13E+02	5.96E+04	1.64E+04	1.22E-01	6.78E-01

TABLE F-1
ESTIMATED CONTAINER ACTIVITIES FOR GTCC LLW FROM US REACTORS
(continued)

Reactor	Reactor Number	No. AMCs	Activity Per Container (Ci/container)							
			C-14	Mn-54	Fe-55	Ni-59	Co-60	Ni-63	Mo-93	Nb-94
Beaver Valley 1	PWR39	9	1.93E+01	6.08E+01	3.63E+04	1.03E+02	5.44E+04	1.50E+04	1.11E-01	6.19E-01
Beaver Valley 2	PWR40	9	1.96E+01	6.16E+01	3.67E+04	1.04E+02	5.51E+04	1.51E+04	1.12E-01	6.26E-01
Catawba 1	PWR41	12	1.99E+01	6.28E+01	3.74E+04	1.06E+02	5.61E+04	1.54E+04	1.14E-01	6.38E-01
Catawba 2	PWR42	12	1.99E+01	6.28E+01	3.74E+04	1.06E+02	5.61E+04	1.54E+04	1.14E-01	6.38E-01
Summer	PWR43	10	2.05E+01	6.44E+01	3.84E+04	1.09E+02	5.76E+04	1.58E+04	1.18E-01	6.55E-01
Sequoyah 1	PWR44	12	2.03E+01	6.39E+01	3.81E+04	1.08E+02	5.71E+04	1.57E+04	1.17E-01	6.50E-01
Sequoyah 2	PWR45	12	1.99E+01	6.26E+01	3.73E+04	1.06E+02	5.60E+04	1.54E+04	1.14E-01	6.37E-01
Watts Bar 1	PWR46	12	1.98E+01	6.23E+01	3.71E+04	1.05E+02	5.57E+04	1.53E+04	1.14E-01	6.33E-01
Comanche Peak 1	PWR47	12	2.03E+01	6.39E+01	3.81E+04	1.08E+02	5.71E+04	1.57E+04	1.17E-01	6.50E-01
Comanche Peak 2	PWR48	12	2.03E+01	6.39E+01	3.81E+04	1.08E+02	5.71E+04	1.57E+04	1.17E-01	6.50E-01
South Texas Project 1	PWR49	13	2.09E+01	6.57E+01	3.91E+04	1.11E+02	5.87E+04	1.62E+04	1.20E-01	6.68E-01
South Texas Project 2	PWR50	13	2.09E+01	6.57E+01	3.91E+04	1.11E+02	5.87E+04	1.62E+04	1.20E-01	6.68E-01
Surry 1	PWR51	8	2.12E+01	6.66E+01	3.97E+04	1.13E+02	5.96E+04	1.64E+04	1.22E-01	6.77E-01
Surry 2	PWR52	8	2.12E+01	6.66E+01	3.97E+04	1.13E+02	5.96E+04	1.64E+04	1.22E-01	6.77E-01
North Anna 1	PWR53	10	1.96E+01	6.17E+01	3.68E+04	1.04E+02	5.52E+04	1.52E+04	1.13E-01	6.27E-01
North Anna 2	PWR54	10	1.94E+01	6.12E+01	3.65E+04	1.03E+02	5.47E+04	1.50E+04	1.12E-01	6.22E-01
Palo Verde 1	PWR55	13	2.03E+01	6.38E+01	3.80E+04	1.08E+02	5.70E+04	1.57E+04	1.16E-01	6.48E-01
Palo Verde 2	PWR56	14	1.99E+01	6.26E+01	3.73E+04	1.06E+02	5.60E+04	1.54E+04	1.14E-01	6.36E-01
Palo Verde 3	PWR57	13	2.03E+01	6.40E+01	3.81E+04	1.08E+02	5.72E+04	1.57E+04	1.17E-01	6.50E-01
Arkansas Nuclear One 2	PWR58	10	2.11E+01	6.64E+01	3.96E+04	1.12E+02	5.94E+04	1.63E+04	1.21E-01	6.75E-01
San Onofre 2	PWR59	11	2.06E+01	6.49E+01	3.87E+04	1.10E+02	5.80E+04	1.60E+04	1.18E-01	6.60E-01
San Onofre 3	PWR60	11	2.08E+01	6.55E+01	3.90E+04	1.11E+02	5.85E+04	1.61E+04	1.19E-01	6.66E-01
Millstone 2	PWR61	9	2.08E+01	6.54E+01	3.90E+04	1.11E+02	5.84E+04	1.61E+04	1.19E-01	6.65E-01
St Lucie 1	PWR62	9	1.98E+01	6.22E+01	3.71E+04	1.05E+02	5.56E+04	1.53E+04	1.13E-01	6.32E-01
St Lucie 2	PWR63	9	1.98E+01	6.22E+01	3.71E+04	1.05E+02	5.56E+04	1.53E+04	1.13E-01	6.32E-01
Waterford 3	PWR64	11	2.09E+01	6.59E+01	3.93E+04	1.12E+02	5.89E+04	1.62E+04	1.20E-01	6.70E-01
Calvert Cliffs 1	PWR65	9	2.06E+01	6.47E+01	3.86E+04	1.09E+02	5.78E+04	1.59E+04	1.18E-01	6.58E-01
Calvert Cliffs 2	PWR66	9	2.03E+01	6.39E+01	3.81E+04	1.08E+02	5.71E+04	1.57E+04	1.17E-01	6.49E-01

TABLE F-1
ESTIMATED CONTAINER ACTIVITIES FOR GTCC LLW FROM US REACTORS
(continued)

Reactor	Reactor Number	No. AMCs	Activity Per Container (Ci/container)							
			C-14	Mn-54	Fe-55	Ni-59	Co-60	Ni-63	Mo-93	Nb-94
Palisades	PWR67	8	2.03E+01	6.40E+01	3.81E+04	1.08E+02	5.72E+04	1.57E+04	1.17E-01	6.50E-01
Fort Calhoun	PWR68	5	2.02E+01	6.35E+01	3.78E+04	1.07E+02	5.68E+04	1.56E+04	1.16E-01	6.46E-01
Ginna	PWR69	5	2.11E+01	6.64E+01	3.96E+04	1.12E+02	5.94E+04	1.63E+04	1.21E-01	6.75E-01
PWR Subtotal		**692**								
Haddam Neck	SPWR1	7	1.82E+01	5.95E-05	4.57E+02	9.71E+01	5.49E+03	1.26E+04	1.04E-01	5.83E-01
Indian Point 1	SPWR2	3	1.43E+01	8.44E-13	1.35E+00	7.63E+01	2.39E+02	8.49E+03	8.17E-02	4.58E-01
Maine Yankee	SPWR3	9	2.09E+01	6.85E-05	5.26E+02	1.12E+02	6.32E+03	1.45E+04	1.20E-01	6.71E-01
Rancho Seco	SPWR4	10	1.93E+01	2.17E-07	8.22E+01	1.03E+02	2.32E+03	1.27E+04	1.11E-01	6.20E-01
San Onofre 1	SPWR5	5	1.88E+01	2.40E-06	1.71E+02	1.00E+02	3.35E+03	1.26E+04	1.08E-01	6.02E-01
Saxton	SPWR6	1	1.65E+01	1.92E-13	9.36E-01	8.80E+01	2.12E+02	9.66E+03	9.42E-02	5.28E-01
Yankee-Rowe	SPWR7	2	2.09E+01	1.19E-06	1.48E+02	1.12E+02	3.27E+03	1.40E+04	1.20E-01	6.71E-01
Zion 1	SPWR8	11	2.06E+01	3.41E-04	8.61E+02	1.10E+02	8.09E+03	1.44E+04	1.18E-01	6.61E-01
Zion 2	SPWR9	11	2.06E+01	3.41E-04	8.61E+02	1.10E+02	8.09E+03	1.44E+04	1.18E-01	6.61E-01
Shutdown PWR Subtotal		**59**								
GRAND TOTAL		**997**								

TABLE F-2
ESTIMATED CONTAINER ACTIVITIES FOR GTCC LLW FROM US REACTORS

Reactor	Reactor Number	No. SAMCs	Activity Per Container (Ci/container)							
			C-14	Mn-54	Fe-55	Ni-59	Co-60	Ni-63	Mo-93	Nb-94
Browns Ferry 1	BWR1	22	1.06E+01	6.65E+00	2.03E+04	6.44E+01	1.55E+04	8.50E+03	3.30E-02	1.52E-01
Browns Ferry 2	BWR2	23	1.07E+01	6.67E+00	2.04E+04	6.46E+01	1.55E+04	8.53E+03	3.31E-02	1.52E-01
Browns Ferry 3	BWR3	23	1.06E+01	6.65E+00	2.04E+04	6.44E+01	1.55E+04	8.50E+03	3.30E-02	1.52E-01
Fermi 2	BWR4	23	1.06E+01	6.63E+00	2.03E+04	6.42E+01	1.54E+04	8.48E+03	3.29E-02	1.51E-01
Hope Creek 1	BWR5	22	1.05E+01	6.55E+00	2.00E+04	6.34E+01	1.52E+04	8.37E+03	3.25E-02	1.50E-01
Peach Bottom 2	BWR6	23	1.06E+01	6.64E+00	2.03E+04	6.43E+01	1.54E+04	8.49E+03	3.29E-02	1.52E-01
Peach Bottom 3	BWR7	23	1.06E+01	6.64E+00	2.03E+04	6.43E+01	1.54E+04	8.49E+03	3.29E-02	1.52E-01
Susquehanna 1	BWR8	23	1.08E+01	6.78E+00	2.07E+04	6.56E+01	1.58E+04	8.66E+03	3.36E-02	1.55E-01
Susquehanna 2	BWR9	23	1.09E+01	6.81E+00	2.08E+04	6.59E+01	1.58E+04	8.70E+03	3.37E-02	1.55E-01
Limerick 1	BWR10	23	1.08E+01	6.77E+00	2.07E+04	6.56E+01	1.57E+04	8.66E+03	3.36E-02	1.55E-01
Limerick 2	BWR11	23	1.08E+01	6.77E+00	2.07E+04	6.56E+01	1.57E+04	8.66E+03	3.36E-02	1.55E-01
La Salle 1	BWR12	23	1.07E+01	6.67E+00	2.04E+04	6.46E+01	1.55E+04	8.53E+03	3.31E-02	1.52E-01
La Salle 2	BWR13	23	1.07E+01	6.69E+00	2.05E+04	6.48E+01	1.55E+04	8.55E+03	3.32E-02	1.53E-01
Nine Mile Point 2	BWR14	23	1.08E+01	6.78E+00	2.07E+04	6.56E+01	1.58E+04	8.67E+03	3.36E-02	1.55E-01
Columbia Generating Station	BWR15	23	1.07E+01	6.70E+00	2.05E+04	6.49E+01	1.56E+04	8.56E+03	3.32E-02	1.53E-01
Clinton	BWR16	21	1.09E+01	6.82E+00	2.09E+04	6.60E+01	1.59E+04	8.72E+03	3.38E-02	1.56E-01
River Bend 1	BWR17	20	1.06E+01	6.65E+00	2.03E+04	6.44E+01	1.54E+04	8.50E+03	3.30E-02	1.52E-01
Grand Gulf 1	BWR18	26	1.07E+01	6.71E+00	2.05E+04	6.50E+01	1.56E+04	8.58E+03	3.33E-02	1.53E-01
Perry 1	BWR19	25	1.08E+01	6.78E+00	2.08E+04	6.57E+01	1.58E+04	8.67E+03	3.36E-02	1.55E-01
Oyster Creek	BWR20	13	1.04E+01	6.54E+00	2.00E+04	6.33E+01	1.52E+04	8.36E+03	3.24E-02	1.49E-01
Nine Mile Point 1	BWR21	13	1.05E+01	6.55E+00	2.01E+04	6.35E+01	1.52E+04	8.38E+03	3.25E-02	1.50E-01
Dresden 2	BWR22	18	1.06E+01	6.61E+00	2.02E+04	6.40E+01	1.54E+04	8.46E+03	3.28E-02	1.51E-01
Dresden 3	BWR23	18	1.06E+01	6.61E+00	2.02E+04	6.40E+01	1.54E+04	8.46E+03	3.28E-02	1.51E-01
Quad Cities 1	BWR24	18	1.06E+01	6.61E+00	2.02E+04	6.40E+01	1.54E+04	8.46E+03	3.28E-02	1.51E-01
Quad Cities 2	BWR25	18	1.06E+01	6.61E+00	2.02E+04	6.40E+01	1.54E+04	8.46E+03	3.28E-02	1.51E-01
Pilgrim 1	BWR26	14	1.07E+01	6.72E+00	2.06E+04	6.50E+01	1.56E+04	8.59E+03	3.33E-02	1.53E-01
Monticello	BWR27	12	1.04E+01	6.51E+00	1.99E+04	6.30E+01	1.51E+04	8.32E+03	3.23E-02	1.49E-01

TABLE F-2
ESTIMATED CONTAINER ACTIVITIES FOR GTCC LLW FROM US REACTORS
(continued)

Reactor	Reactor Number	No. SAMCs	Activity Per Container (Ci/container)							
			C-14	Mn-54	Fe-55	Ni-59	Co-60	Ni-63	Mo-93	Nb-94
Hatch 1	BWR28	18	1.06E+01	6.63E+00	2.03E+04	6.42E+01	1.54E+04	8.48E+03	3.29E-02	1.51E-01
Hatch 2	BWR29	18	1.08E+01	6.74E+00	2.06E+04	6.52E+01	1.57E+04	8.61E+03	3.34E-02	1.54E-01
Duane Arnold	BWR30	12	1.03E+01	6.44E+00	1.97E+04	6.23E+01	1.50E+04	8.23E+03	3.19E-02	1.47E-01
Cooper	BWR31	16	1.04E+01	6.49E+00	1.99E+04	6.28E+01	1.51E+04	8.30E+03	3.22E-02	1.48E-01
FitzPatrick	BWR32	17	1.09E+01	6.82E+00	2.09E+04	6.60E+01	1.58E+04	8.72E+03	3.38E-02	1.56E-01
Brunswick 1	BWR33	19	1.08E+01	6.78E+00	2.08E+04	6.56E+01	1.58E+04	8.67E+03	3.36E-02	1.55E-01
Brunswick 2	BWR34	19	1.04E+01	6.50E+00	1.99E+04	6.30E+01	1.51E+04	8.32E+03	3.22E-02	1.49E-01
Vermont Yankee	BWR35	11	1.01E+01	6.32E+00	1.93E+04	6.12E+01	1.47E+04	8.08E+03	3.13E-02	1.44E-01
BWR Subtotal		**689**								
Big Rock Point	SBWR1	2	8.67E+00	1.27E-05	2.87E+02	5.26E+01	1.54E+03	6.23E+03	2.69E-02	1.24E-01
Dresden 1	SBWR2	5	1.01E+01	3.03E-12	2.69E+00	6.14E+01	1.48E+02	6.38E+03	3.12E-02	1.45E-01
GE VBWR	SBWR3	1	3.71E+00	5.86E-18	2.20E-02	2.26E+01	7.58E+00	2.12E+03	1.15E-02	5.32E-02
Humboldt Bay 3	SBWR4	2	7.21E+00	4.28E-13	1.16E+00	4.39E+01	8.13E+01	4.49E+03	2.23E-02	1.03E-01
La Crosse	SBWR5	2	5.95E+00	2.63E-09	1.56E+01	3.62E+01	2.85E+02	4.00E+03	1.84E-02	8.53E-02
Millstone 1	SBWR6	14	1.04E+01	3.41E-05	4.42E+02	6.30E+01	2.11E+03	7.51E+03	3.22E-02	1.49E-01
Pathfinder	SBWR7	2	6.84E+00	2.76E-16	1.12E-01	4.17E+01	2.36E+01	4.01E+03	2.11E-02	9.81E-02
Shutdown BWR Subtotal		**28**								
Arkansas Nuclear 1	PWR1	27	6.60E+00	2.08E+01	1.24E+04	3.52E+01	1.86E+04	5.11E+03	3.79E-02	2.11E-01
Crystal River 3	PWR2	27	6.58E+00	2.07E+01	1.23E+04	3.50E+01	1.85E+04	5.09E+03	3.78E-02	2.10E-01
Davis-Besse	PWR3	28	6.61E+00	2.08E+01	1.24E+04	3.52E+01	1.86E+04	5.11E+03	3.79E-02	2.11E-01
Three Mile Island 1	PWR4	26	6.60E+00	2.08E+01	1.24E+04	3.52E+01	1.86E+04	5.11E+03	3.79E-02	2.11E-01
Oconee 1	PWR5	27	6.64E+00	2.09E+01	1.25E+04	3.54E+01	1.87E+04	5.14E+03	3.81E-02	2.12E-01
Oconee 2	PWR6	27	6.64E+00	2.09E+01	1.25E+04	3.54E+01	1.87E+04	5.14E+03	3.81E-02	2.12E-01
Oconee 3	PWR7	27	6.64E+00	2.09E+01	1.25E+04	3.54E+01	1.87E+04	5.14E+03	3.81E-02	2.12E-01
Turkey Point 4	PWR8	22	6.68E+00	2.10E+01	1.25E+04	3.56E+01	1.88E+04	5.17E+03	3.83E-02	2.14E-01
Turkey Point 3	PWR9	22	6.68E+00	2.10E+01	1.25E+04	3.56E+01	1.88E+04	5.17E+03	3.83E-02	2.14E-01
Prairie Island 1	PWR10	17	6.51E+00	2.05E+01	1.22E+04	3.47E+01	1.83E+04	5.04E+03	3.74E-02	2.08E-01
Prairie Island 2	PWR11	17	6.51E+00	2.05E+01	1.22E+04	3.47E+01	1.83E+04	5.04E+03	3.74E-02	2.08E-01
Robinson 2	PWR12	23	6.54E+00	2.06E+01	1.23E+04	3.48E+01	1.84E+04	5.06E+03	3.76E-02	2.09E-01

TABLE F-2
ESTIMATED CONTAINER ACTIVITIES FOR GTCC LLW FROM US REACTORS
(continued)

Reactor	Reactor Number	No. SAMCs	Activity Per Container (Ci/container)							
			C-14	Mn-54	Fe-55	Ni-59	Co-60	Ni-63	Mo-93	Nb-94
Point Beach 1	PWR13	16	6.38E+00	2.01E+01	1.20E+04	3.40E+01	1.80E+04	4.94E+03	3.67E-02	2.04E-01
Point Beach 2	PWR14	17	6.46E+00	2.03E+01	1.21E+04	3.44E+01	1.82E+04	5.00E+03	3.71E-02	2.07E-01
Kewaunee	PWR15	18	6.59E+00	2.08E+01	1.24E+04	3.51E+01	1.86E+04	5.10E+03	3.79E-02	2.11E-01
Farley 1	PWR16	27	6.68E+00	2.10E+01	1.25E+04	3.56E+01	1.88E+04	5.17E+03	3.84E-02	2.14E-01
Farley 2	PWR17	27	6.75E+00	2.12E+01	1.27E+04	3.59E+01	1.90E+04	5.22E+03	3.88E-02	2.16E-01
Diablo Canyon 1	PWR18	34	6.78E+00	2.13E+01	1.27E+04	3.61E+01	1.91E+04	5.24E+03	3.89E-02	2.17E-01
Diablo Canyon 2	PWR19	34	6.78E+00	2.13E+01	1.27E+04	3.61E+01	1.91E+04	5.24E+03	3.89E-02	2.17E-01
Millstone 3	PWR20	37	6.62E+00	2.08E+01	1.24E+04	3.52E+01	1.86E+04	5.12E+03	3.80E-02	2.12E-01
Vogtle 1	PWR21	36	6.78E+00	2.13E+01	1.27E+04	3.61E+01	1.91E+04	5.25E+03	3.89E-02	2.17E-01
Vogtle 2	PWR22	36	6.77E+00	2.13E+01	1.27E+04	3.60E+01	1.90E+04	5.24E+03	3.88E-02	2.16E-01
Braidwood 1	PWR23	37	6.75E+00	2.12E+01	1.27E+04	3.59E+01	1.90E+04	5.22E+03	3.87E-02	2.16E-01
Braidwood 2	PWR24	36	6.78E+00	2.13E+01	1.27E+04	3.61E+01	1.91E+04	5.25E+03	3.89E-02	2.17E-01
Byron 1	PWR25	37	6.67E+00	2.10E+01	1.25E+04	3.55E+01	1.88E+04	5.16E+03	3.83E-02	2.13E-01
Byron 2	PWR26	36	6.69E+00	2.10E+01	1.25E+04	3.56E+01	1.88E+04	5.18E+03	3.84E-02	2.14E-01
Wolf Creek 1	PWR27	37	6.68E+00	2.10E+01	1.25E+04	3.56E+01	1.88E+04	5.17E+03	3.84E-02	2.14E-01
D.C. Cook 1	PWR28	32	6.73E+00	2.12E+01	1.26E+04	3.58E+01	1.89E+04	5.21E+03	3.86E-02	2.15E-01
D.C. Cook 2	PWR29	34	6.71E+00	2.11E+01	1.26E+04	3.58E+01	1.89E+04	5.20E+03	3.86E-02	2.15E-01
Callaway	PWR30	36	6.69E+00	2.11E+01	1.26E+04	3.56E+01	1.88E+04	5.18E+03	3.84E-02	2.14E-01
Seabrook 1	PWR31	37	6.64E+00	2.09E+01	1.25E+04	3.54E+01	1.87E+04	5.14E+03	3.81E-02	2.12E-01
Salem 1	PWR32	37	6.73E+00	2.12E+01	1.26E+04	3.58E+01	1.89E+04	5.20E+03	3.86E-02	2.15E-01
Salem 2	PWR33	36	6.65E+00	2.09E+01	1.25E+04	3.54E+01	1.87E+04	5.15E+03	3.82E-02	2.13E-01
Indian Point 2	PWR34	31	6.69E+00	2.11E+01	1.26E+04	3.56E+01	1.88E+04	5.18E+03	3.84E-02	2.14E-01
Indian Point 3	PWR35	31	6.78E+00	2.13E+01	1.27E+04	3.61E+01	1.91E+04	5.24E+03	3.89E-02	2.17E-01
Harris 1	PWR36	29	6.58E+00	2.07E+01	1.23E+04	3.50E+01	1.85E+04	5.09E+03	3.78E-02	2.10E-01
McGuire 1	PWR37	35	6.66E+00	2.10E+01	1.25E+04	3.55E+01	1.87E+04	5.16E+03	3.82E-02	2.13E-01
McGuire 2	PWR38	35	6.66E+00	2.10E+01	1.25E+04	3.55E+01	1.87E+04	5.16E+03	3.82E-02	2.13E-01
Beaver Valley 1	PWR39	26	6.69E+00	2.11E+01	1.26E+04	3.56E+01	1.88E+04	5.18E+03	3.84E-02	2.14E-01
Beaver Valley 2	PWR40	26	6.78E+00	2.13E+01	1.27E+04	3.61E+01	1.91E+04	5.24E+03	3.89E-02	2.17E-01
Catawba 1	PWR41	36	6.65E+00	2.09E+01	1.25E+04	3.54E+01	1.87E+04	5.14E+03	3.82E-02	2.13E-01

TABLE F-2
ESTIMATED CONTAINER ACTIVITIES FOR GTCC LLW FROM US REACTORS
(continued)

Reactor	Reactor Number	No. SAMCs	Activity Per Container (Ci/container)							
			C-14	Mn-54	Fe-55	Ni-59	Co-60	Ni-63	Mo-93	Nb-94
Catawba 2	PWR42	36	6.65E+00	2.09E+01	1.25E+04	3.54E+01	1.87E+04	5.14E+03	3.82E-02	2.13E-01
Summer	PWR43	31	6.61E+00	2.08E+01	1.24E+04	3.52E+01	1.86E+04	5.11E+03	3.79E-02	2.11E-01
Sequoyah 1	PWR44	36	6.77E+00	2.13E+01	1.27E+04	3.61E+01	1.90E+04	5.24E+03	3.89E-02	2.17E-01
Sequoyah 2	PWR45	36	6.64E+00	2.09E+01	1.24E+04	3.53E+01	1.87E+04	5.14E+03	3.81E-02	2.12E-01
Watts Bar 1	PWR46	35	6.79E+00	2.14E+01	1.27E+04	3.61E+01	1.91E+04	5.25E+03	3.90E-02	2.17E-01
Comanche Peak 1	PWR47	36	6.77E+00	2.13E+01	1.27E+04	3.61E+01	1.90E+04	5.24E+03	3.89E-02	2.17E-01
Comanche Peak 2	PWR48	36	6.77E+00	2.13E+01	1.27E+04	3.61E+01	1.90E+04	5.24E+03	3.89E-02	2.17E-01
South Texas 1	PWR49	40	6.78E+00	2.13E+01	1.27E+04	3.61E+01	1.91E+04	5.25E+03	3.89E-02	2.17E-01
South Texas 2	PWR50	40	6.78E+00	2.13E+01	1.27E+04	3.61E+01	1.91E+04	5.25E+03	3.89E-02	2.17E-01
Surry 1	PWR51	25	6.77E+00	2.13E+01	1.27E+04	3.61E+01	1.91E+04	5.24E+03	3.89E-02	2.17E-01
Surry 2	PWR52	25	6.77E+00	2.13E+01	1.27E+04	3.61E+01	1.91E+04	5.24E+03	3.89E-02	2.17E-01
North Anna 1	PWR53	29	6.76E+00	2.13E+01	1.27E+04	3.60E+01	1.90E+04	5.23E+03	3.88E-02	2.16E-01
North Anna 2	PWR54	29	6.70E+00	2.11E+01	1.26E+04	3.57E+01	1.89E+04	5.19E+03	3.85E-02	2.14E-01
Palo Verde 1	PWR55	39	6.76E+00	2.13E+01	1.27E+04	3.60E+01	1.90E+04	5.23E+03	3.88E-02	2.16E-01
Palo Verde 2	PWR56	42	6.63E+00	2.09E+01	1.24E+04	3.53E+01	1.87E+04	5.13E+03	3.81E-02	2.12E-01
Palo Verde 3	PWR57	39	6.78E+00	2.13E+01	1.27E+04	3.61E+01	1.91E+04	5.24E+03	3.89E-02	2.17E-01
Arkansas Nuclear 2	PWR58	32	6.60E+00	2.08E+01	1.24E+04	3.51E+01	1.86E+04	5.11E+03	3.79E-02	2.11E-01
San Onofre 2	PWR59	34	6.67E+00	2.10E+01	1.25E+04	3.55E+01	1.88E+04	5.16E+03	3.83E-02	2.13E-01
San Onofre 3	PWR60	34	6.73E+00	2.12E+01	1.26E+04	3.59E+01	1.89E+04	5.21E+03	3.87E-02	2.15E-01
Millstone 2	PWR61	28	6.68E+00	2.10E+01	1.25E+04	3.56E+01	1.88E+04	5.17E+03	3.83E-02	2.14E-01
Saint Lucie 1	PWR62	27	6.59E+00	2.07E+01	1.24E+04	3.51E+01	1.85E+04	5.10E+03	3.78E-02	2.11E-01
Saint Lucie 2	PWR63	27	6.59E+00	2.07E+01	1.24E+04	3.51E+01	1.85E+04	5.10E+03	3.78E-02	2.11E-01
Waterford 3	PWR64	34	6.78E+00	2.13E+01	1.27E+04	3.61E+01	1.91E+04	5.24E+03	3.89E-02	2.17E-01
Calvert Cliffs 1	PWR65	28	6.61E+00	2.08E+01	1.24E+04	3.52E+01	1.86E+04	5.11E+03	3.79E-02	2.11E-01
Calvert Cliffs 2	PWR66	27	6.77E+00	2.13E+01	1.27E+04	3.60E+01	1.90E+04	5.24E+03	3.89E-02	2.16E-01
Palisades	PWR67	24	6.77E+00	2.13E+01	1.27E+04	3.61E+01	1.91E+04	5.24E+03	3.89E-02	2.17E-01
Fort Calhoun	PWR68	15	6.73E+00	2.12E+01	1.26E+04	3.58E+01	1.89E+04	5.21E+03	3.86E-02	2.15E-01
Ginna	PWR69	16	6.59E+00	2.07E+01	1.24E+04	3.51E+01	1.85E+04	5.10E+03	3.79E-02	2.11E-01
PWR Subtotal		**2096**								

TABLE F-2
ESTIMATED CONTAINER ACTIVITIES FOR GTCC LLW FROM US REACTORS
(continued)

Reactor	Reactor Number	No. SAMCs	Activity Per Container (Ci/container)							
			C-14	Mn-54	Fe-55	Ni-59	Co-60	Ni-63	Mo-93	Nb-94
Haddam Neck	SPWR1	19	6.71E+00	2.19E-05	1.68E+02	3.58E+01	2.02E+03	4.63E+03	3.84E-02	2.15E-01
Indian Point 1	SPWR2	7	6.12E+00	3.62E-13	5.78E-01	3.27E+01	1.03E+02	3.64E+03	3.50E-02	1.96E-01
Maine Yankee	SPWR3	28	6.73E+00	2.20E-05	1.69E+02	3.59E+01	2.03E+03	4.65E+03	3.86E-02	2.16E-01
Rancho Seco	SPWR4	29	6.67E+00	7.50E-08	2.83E+01	3.56E+01	8.02E+02	4.39E+03	3.82E-02	2.14E-01
San Onofre 1	SPWR5	14	6.71E+00	8.59E-07	6.11E+01	3.58E+01	1.20E+03	4.51E+03	3.85E-02	2.15E-01
Saxton	SPWR6	3	5.48E+00	6.41E-14	3.12E-01	2.93E+01	7.07E+01	3.22E+03	3.14E-02	1.76E-01
Yankee-Rowe	SPWR7	7	5.98E+00	3.40E-07	4.22E+01	3.19E+01	9.35E+02	3.99E+03	3.43E-02	1.92E-01
Zion 1	SPWR8	34	6.67E+00	1.10E-04	2.78E+02	3.56E+01	2.62E+03	4.67E+03	3.83E-02	2.14E-01
Zion 2	SPWR9	34	6.67E+00	1.10E-04	2.78E+02	3.56E+01	2.62E+03	4.67E+03	3.83E-02	2.14E-01
Shutdown PWR Subtotal		**175**								
GRAND TOTAL		**2988**								

TABLE F-3
ESTIMATED CONTAINER ACTIVITIES FOR GTCC LLW FROM US REACTORS

Reactor	Reactor Number	No. H-SAMCs	Activity Per Container (Ci/container)							
			C-14	Mn-54	Fe-55	Ni-59	Co-60	Ni-63	Mo-93	Nb-94
Browns Ferry 1	BWR1	85	2.75E+00	1.72E+00	5.27E+03	1.67E+01	4.00E+03	2.20E+03	8.53E-03	3.93E-02
Browns Ferry 2	BWR2	89	2.76E+00	1.72E+00	5.28E+03	1.67E+01	4.01E+03	2.21E+03	8.55E-03	3.94E-02
Browns Ferry 3	BWR3	89	2.75E+00	1.72E+00	5.26E+03	1.66E+01	4.00E+03	2.20E+03	8.52E-03	3.92E-02
Fermi 2	BWR4	89	2.74E+00	1.71E+00	5.25E+03	1.66E+01	3.98E+03	2.19E+03	8.50E-03	3.91E-02
Hope Creek 1	BWR5	84	2.74E+00	1.71E+00	5.25E+03	1.66E+01	3.99E+03	2.19E+03	8.50E-03	3.92E-02
Peach Bottom 2	BWR6	89	2.74E+00	1.72E+00	5.25E+03	1.66E+01	3.99E+03	2.19E+03	8.51E-03	3.92E-02
Peach Bottom 3	BWR7	89	2.74E+00	1.72E+00	5.25E+03	1.66E+01	3.99E+03	2.19E+03	8.51E-03	3.92E-02
Susquehanna 1	BWR8	91	2.74E+00	1.71E+00	5.24E+03	1.66E+01	3.98E+03	2.19E+03	8.49E-03	3.91E-02
Susquehanna 2	BWR9	91	2.75E+00	1.72E+00	5.27E+03	1.67E+01	4.00E+03	2.20E+03	8.53E-03	3.93E-02
Limerick 1	BWR10	90	2.76E+00	1.73E+00	5.30E+03	1.68E+01	4.02E+03	2.21E+03	8.58E-03	3.95E-02
Limerick 2	BWR11	90	2.76E+00	1.73E+00	5.30E+03	1.68E+01	4.02E+03	2.21E+03	8.58E-03	3.95E-02
La Salle 1	BWR12	89	2.76E+00	1.72E+00	5.28E+03	1.67E+01	4.01E+03	2.21E+03	8.55E-03	3.94E-02
La Salle 2	BWR13	89	2.76E+00	1.73E+00	5.29E+03	1.67E+01	4.02E+03	2.21E+03	8.57E-03	3.95E-02
Nine Mile Point 2	BWR14	91	2.74E+00	1.71E+00	5.24E+03	1.66E+01	3.98E+03	2.19E+03	8.49E-03	3.91E-02
Columbia Generating Station	BWR15	90	2.73E+00	1.71E+00	5.24E+03	1.66E+01	3.98E+03	2.19E+03	8.49E-03	3.91E-02
Clinton	BWR16	83	2.76E+00	1.73E+00	5.28E+03	1.67E+01	4.01E+03	2.21E+03	8.56E-03	3.94E-02
River Bend 1	BWR17	77	2.76E+00	1.73E+00	5.28E+03	1.67E+01	4.01E+03	2.21E+03	8.56E-03	3.94E-02
Grand Gulf 1	BWR18	101	2.76E+00	1.73E+00	5.29E+03	1.67E+01	4.01E+03	2.21E+03	8.56E-03	3.94E-02
Perry 1	BWR19	98	2.76E+00	1.73E+00	5.30E+03	1.68E+01	4.02E+03	2.21E+03	8.58E-03	3.95E-02
Oyster Creek	BWR20	50	2.72E+00	1.70E+00	5.20E+03	1.65E+01	3.95E+03	2.17E+03	8.43E-03	3.88E-02
Nine Mile Point 1	BWR21	50	2.72E+00	1.70E+00	5.22E+03	1.65E+01	3.96E+03	2.18E+03	8.45E-03	3.89E-02
Dresden 2	BWR22	69	2.76E+00	1.73E+00	5.28E+03	1.67E+01	4.01E+03	2.21E+03	8.55E-03	3.94E-02
Dresden 3	BWR23	69	2.76E+00	1.73E+00	5.28E+03	1.67E+01	4.01E+03	2.21E+03	8.55E-03	3.94E-02
Quad Cities 1	BWR24	69	2.76E+00	1.73E+00	5.28E+03	1.67E+01	4.01E+03	2.21E+03	8.55E-03	3.94E-02
Quad Cities 2	BWR25	69	2.76E+00	1.73E+00	5.28E+03	1.67E+01	4.01E+03	2.21E+03	8.55E-03	3.94E-02
Pilgrim 1	BWR26	55	2.73E+00	1.71E+00	5.23E+03	1.66E+01	3.97E+03	2.19E+03	8.48E-03	3.90E-02
Monticello	BWR27	46	2.71E+00	1.70E+00	5.20E+03	1.64E+01	3.95E+03	2.17E+03	8.42E-03	3.88E-02

TABLE F-3
ESTIMATED CONTAINER ACTIVITIES FOR GTCC LLW FROM US REACTORS
(continued)

Reactor	Reactor Number	No. H-SAMCs	Activity Per Container (Ci/container)							
			C-14	Mn-54	Fe-55	Ni-59	Co-60	Ni-63	Mo-93	Nb-94
Hatch 1	BWR28	69	2.76E+00	1.73E+00	5.29E+03	1.67E+01	4.02E+03	2.21E+03	8.57E-03	3.95E-02
Hatch 2	BWR29	71	2.73E+00	1.71E+00	5.23E+03	1.65E+01	3.97E+03	2.18E+03	8.47E-03	3.90E-02
Duane Arnold	BWR30	45	2.74E+00	1.72E+00	5.25E+03	1.66E+01	3.99E+03	2.19E+03	8.51E-03	3.92E-02
Cooper	BWR31	60	2.76E+00	1.73E+00	5.30E+03	1.68E+01	4.02E+03	2.21E+03	8.58E-03	3.95E-02
FitzPatrick	BWR32	67	2.76E+00	1.73E+00	5.29E+03	1.68E+01	4.02E+03	2.21E+03	8.58E-03	3.95E-02
Brunswick 1	BWR33	75	2.74E+00	1.72E+00	5.26E+03	1.66E+01	3.99E+03	2.20E+03	8.51E-03	3.92E-02
Brunswick 2	BWR34	72	2.74E+00	1.72E+00	5.25E+03	1.66E+01	3.99E+03	2.19E+03	8.51E-03	3.92E-02
Vermont Yankee	BWR35	41	2.71E+00	1.69E+00	5.19E+03	1.64E+01	3.94E+03	2.17E+03	8.40E-03	3.87E-02
BWR Subtotal		**2671**								
Big Rock Point	SBWR1	1	1.73E+01	2.54E-05	5.73E+02	1.05E+02	3.08E+03	1.25E+04	5.37E-02	2.48E-01
Dresden 1	SBWR2	1	5.05E+01	1.52E-11	1.34E+01	3.07E+02	7.40E+02	3.19E+04	1.56E-01	7.23E-01
GE VBWR	SBWR3	1	3.71E+00	5.86E-18	2.20E-02	2.26E+01	7.58E+00	2.12E+03	1.15E-02	5.32E-02
Humboldt Bay 3	SBWR4	1	1.44E+01	8.57E-13	2.31E+00	8.77E+01	1.63E+02	8.99E+03	4.46E-02	2.07E-01
La Crosse	SBWR5	1	1.19E+01	5.27E-09	3.11E+01	7.24E+01	5.70E+02	8.00E+03	3.69E-02	1.71E-01
Millstone 1	SBWR6	8	1.82E+01	5.98E-05	7.74E+02	1.10E+02	3.68E+03	1.31E+04	5.63E-02	2.60E-01
Pathfinder	SBWR7	1	1.37E+01	5.53E-16	2.24E-01	8.33E+01	4.73E+01	8.03E+03	4.23E-02	1.96E-01
Shutdown BWR Subtotal		**14**								
Arkansas Nuclear 1	PWR1	125	1.43E+00	4.49E+00	2.67E+03	7.59E+00	4.01E+03	1.10E+03	8.19E-03	4.56E-02
Crystal River 3	PWR2	125	1.42E+00	4.47E+00	2.67E+03	7.57E+00	4.00E+03	1.10E+03	8.16E-03	4.55E-02
Davis-Besse	PWR3	130	1.42E+00	4.48E+00	2.67E+03	7.58E+00	4.00E+03	1.10E+03	8.17E-03	4.55E-02
Three Mile Island 1	PWR4	121	1.42E+00	4.47E+00	2.66E+03	7.56E+00	3.99E+03	1.10E+03	8.15E-03	4.54E-02
Oconee 1	PWR5	126	1.42E+00	4.48E+00	2.67E+03	7.58E+00	4.00E+03	1.10E+03	8.17E-03	4.55E-02
Oconee 2	PWR6	126	1.42E+00	4.48E+00	2.67E+03	7.58E+00	4.00E+03	1.10E+03	8.17E-03	4.55E-02
Oconee 3	PWR7	126	1.42E+00	4.48E+00	2.67E+03	7.58E+00	4.00E+03	1.10E+03	8.17E-03	4.55E-02
Turkey Point 4	PWR8	103	1.43E+00	4.49E+00	2.67E+03	7.59E+00	4.01E+03	1.10E+03	8.19E-03	4.56E-02
Turkey Point 3	PWR9	103	1.43E+00	4.49E+00	2.67E+03	7.59E+00	4.01E+03	1.10E+03	8.19E-03	4.56E-02
Prairie Island 1	PWR10	78	1.42E+00	4.46E+00	2.66E+03	7.55E+00	3.99E+03	1.10E+03	8.14E-03	4.54E-02
Prairie Island 2	PWR11	78	1.42E+00	4.46E+00	2.66E+03	7.55E+00	3.99E+03	1.10E+03	8.14E-03	4.54E-02
Robinson 2	PWR12	106	1.42E+00	4.47E+00	2.66E+03	7.56E+00	3.99E+03	1.10E+03	8.15E-03	4.54E-02

TABLE F-3
ESTIMATED CONTAINER ACTIVITIES FOR GTCC LLW FROM US REACTORS
(continued)

Reactor	Reactor Number	No. H-SAMCs	Activity Per Container (Ci/container)							
			C-14	Mn-54	Fe-55	Ni-59	Co-60	Ni-63	Mo-93	Nb-94
Point Beach 1	PWR13	76	1.43E+00	4.49E+00	2.68E+03	7.60E+00	4.02E+03	1.11E+03	8.20E-03	4.57E-02
Point Beach 2	PWR14	77	1.43E+00	4.49E+00	2.67E+03	7.59E+00	4.01E+03	1.10E+03	8.19E-03	4.56E-02
Kewaunee	PWR15	83	1.43E+00	4.50E+00	2.68E+03	7.61E+00	4.02E+03	1.11E+03	8.21E-03	4.57E-02
Farley 1	PWR16	127	1.42E+00	4.47E+00	2.66E+03	7.56E+00	4.00E+03	1.10E+03	8.15E-03	4.54E-02
Farley 2	PWR17	128	1.42E+00	4.48E+00	2.67E+03	7.58E+00	4.01E+03	1.10E+03	8.18E-03	4.56E-02
Diablo Canyon 1	PWR18	162	1.42E+00	4.48E+00	2.67E+03	7.57E+00	4.00E+03	1.10E+03	8.17E-03	4.55E-02
Diablo Canyon 2	PWR19	162	1.42E+00	4.48E+00	2.67E+03	7.57E+00	4.00E+03	1.10E+03	8.17E-03	4.55E-02
Millstone 3	PWR20	172	1.42E+00	4.48E+00	2.67E+03	7.58E+00	4.00E+03	1.10E+03	8.17E-03	4.55E-02
Vogtle 1	PWR21	171	1.43E+00	4.49E+00	2.68E+03	7.60E+00	4.02E+03	1.11E+03	8.20E-03	4.57E-02
Vogtle 2	PWR22	171	1.42E+00	4.48E+00	2.67E+03	7.58E+00	4.01E+03	1.10E+03	8.18E-03	4.56E-02
Braidwood 1	PWR23	175	1.43E+00	4.49E+00	2.68E+03	7.60E+00	4.01E+03	1.10E+03	8.19E-03	4.56E-02
Braidwood 2	PWR24	171	1.43E+00	4.49E+00	2.68E+03	7.60E+00	4.02E+03	1.11E+03	8.20E-03	4.57E-02
Byron 1	PWR25	173	1.43E+00	4.49E+00	2.67E+03	7.59E+00	4.01E+03	1.10E+03	8.19E-03	4.56E-02
Byron 2	PWR26	169	1.42E+00	4.48E+00	2.67E+03	7.59E+00	4.01E+03	1.10E+03	8.18E-03	4.56E-02
Wolf Creek 1	PWR27	173	1.43E+00	4.50E+00	2.68E+03	7.61E+00	4.02E+03	1.11E+03	8.20E-03	4.57E-02
D.C. Cook 1	PWR28	151	1.43E+00	4.49E+00	2.68E+03	7.59E+00	4.01E+03	1.10E+03	8.19E-03	4.56E-02
D.C. Cook 2	PWR29	160	1.43E+00	4.49E+00	2.68E+03	7.60E+00	4.01E+03	1.10E+03	8.19E-03	4.56E-02
Callaway	PWR30	169	1.43E+00	4.49E+00	2.67E+03	7.59E+00	4.01E+03	1.10E+03	8.19E-03	4.56E-02
Seabrook 1	PWR31	172	1.43E+00	4.50E+00	2.68E+03	7.61E+00	4.02E+03	1.11E+03	8.20E-03	4.57E-02
Salem 1	PWR32	174	1.43E+00	4.50E+00	2.68E+03	7.62E+00	4.02E+03	1.11E+03	8.21E-03	4.58E-02
Salem 2	PWR33	168	1.43E+00	4.49E+00	2.67E+03	7.59E+00	4.01E+03	1.10E+03	8.19E-03	4.56E-02
Indian Point 2	PWR34	146	1.42E+00	4.47E+00	2.67E+03	7.57E+00	4.00E+03	1.10E+03	8.16E-03	4.55E-02
Indian Point 3	PWR35	147	1.43E+00	4.50E+00	2.68E+03	7.61E+00	4.02E+03	1.11E+03	8.20E-03	4.57E-02
Harris 1	PWR36	134	1.42E+00	4.48E+00	2.67E+03	7.58E+00	4.00E+03	1.10E+03	8.17E-03	4.55E-02
McGuire 1	PWR37	164	1.42E+00	4.47E+00	2.67E+03	7.57E+00	4.00E+03	1.10E+03	8.16E-03	4.55E-02
McGuire 2	PWR38	164	1.42E+00	4.47E+00	2.67E+03	7.57E+00	4.00E+03	1.10E+03	8.16E-03	4.55E-02
Beaver Valley 1	PWR39	122	1.43E+00	4.49E+00	2.68E+03	7.60E+00	4.01E+03	1.10E+03	8.19E-03	4.56E-02
Beaver Valley 2	PWR40	124	1.42E+00	4.47E+00	2.66E+03	7.56E+00	4.00E+03	1.10E+03	8.16E-03	4.54E-02
Catawba 1	PWR41	168	1.42E+00	4.48E+00	2.67E+03	7.58E+00	4.01E+03	1.10E+03	8.18E-03	4.56E-02

TABLE F-3
ESTIMATED CONTAINER ACTIVITIES FOR GTCC LLW FROM US REACTORS
(continued)

Reactor	Reactor Number	No. H-SAMCs	Activity Per Container (Ci/container)							
			C-14	Mn-54	Fe-55	Ni-59	Co-60	Ni-63	Mo-93	Nb-94
Catawba 2	PWR42	168	1.42E+00	4.48E+00	2.67E+03	7.58E+00	4.01E+03	1.10E+03	8.18E-03	4.56E-02
Summer	PWR43	144	1.42E+00	4.47E+00	2.67E+03	7.57E+00	4.00E+03	1.10E+03	8.16E-03	4.55E-02
Sequoyah 1	PWR44	171	1.43E+00	4.49E+00	2.67E+03	7.59E+00	4.01E+03	1.10E+03	8.18E-03	4.56E-02
Sequoyah 2	PWR45	168	1.42E+00	4.47E+00	2.67E+03	7.57E+00	4.00E+03	1.10E+03	8.16E-03	4.55E-02
Watts Bar 1	PWR46	167	1.42E+00	4.48E+00	2.67E+03	7.58E+00	4.00E+03	1.10E+03	8.17E-03	4.55E-02
Comanche Peak 1	PWR47	171	1.43E+00	4.49E+00	2.67E+03	7.59E+00	4.01E+03	1.10E+03	8.18E-03	4.56E-02
Comanche Peak 2	PWR48	171	1.43E+00	4.49E+00	2.67E+03	7.59E+00	4.01E+03	1.10E+03	8.18E-03	4.56E-02
South Texas 1	PWR49	190	1.43E+00	4.49E+00	2.68E+03	7.60E+00	4.02E+03	1.11E+03	8.20E-03	4.57E-02
South Texas 2	PWR50	190	1.43E+00	4.49E+00	2.68E+03	7.60E+00	4.02E+03	1.11E+03	8.20E-03	4.57E-02
Surry 1	PWR51	119	1.42E+00	4.48E+00	2.67E+03	7.58E+00	4.00E+03	1.10E+03	8.17E-03	4.55E-02
Surry 2	PWR52	119	1.42E+00	4.48E+00	2.67E+03	7.58E+00	4.00E+03	1.10E+03	8.17E-03	4.55E-02
North Anna 1	PWR53	138	1.42E+00	4.47E+00	2.66E+03	7.57E+00	4.00E+03	1.10E+03	8.16E-03	4.55E-02
North Anna 2	PWR54	136	1.43E+00	4.50E+00	2.68E+03	7.61E+00	4.02E+03	1.11E+03	8.21E-03	4.57E-02
Palo Verde 1	PWR55	185	1.42E+00	4.48E+00	2.67E+03	7.58E+00	4.01E+03	1.10E+03	8.18E-03	4.56E-02
Palo Verde 2	PWR56	195	1.43E+00	4.49E+00	2.68E+03	7.61E+00	4.02E+03	1.11E+03	8.20E-03	4.57E-02
Palo Verde 3	PWR57	185	1.43E+00	4.50E+00	2.68E+03	7.61E+00	4.02E+03	1.11E+03	8.20E-03	4.57E-02
Arkansas Nuclear 2	PWR58	148	1.43E+00	4.49E+00	2.68E+03	7.60E+00	4.01E+03	1.10E+03	8.19E-03	4.56E-02
San Onofre 2	PWR59	159	1.43E+00	4.49E+00	2.68E+03	7.60E+00	4.01E+03	1.10E+03	8.19E-03	4.56E-02
San Onofre 3	PWR60	161	1.42E+00	4.47E+00	2.67E+03	7.57E+00	4.00E+03	1.10E+03	8.16E-03	4.55E-02
Millstone 2	PWR61	131	1.43E+00	4.49E+00	2.68E+03	7.60E+00	4.01E+03	1.10E+03	8.19E-03	4.57E-02
Saint Lucie 1	PWR62	125	1.42E+00	4.48E+00	2.67E+03	7.58E+00	4.00E+03	1.10E+03	8.17E-03	4.55E-02
Saint Lucie 2	PWR63	125	1.42E+00	4.48E+00	2.67E+03	7.58E+00	4.00E+03	1.10E+03	8.17E-03	4.55E-02
Waterford 3	PWR64	162	1.42E+00	4.48E+00	2.67E+03	7.57E+00	4.00E+03	1.10E+03	8.17E-03	4.55E-02
Calvert Cliffs 1	PWR65	130	1.42E+00	4.48E+00	2.67E+03	7.58E+00	4.00E+03	1.10E+03	8.17E-03	4.55E-02
Calvert Cliffs 2	PWR66	128	1.43E+00	4.49E+00	2.68E+03	7.60E+00	4.02E+03	1.10E+03	8.20E-03	4.57E-02
Palisades	PWR67	114	1.43E+00	4.49E+00	2.67E+03	7.59E+00	4.01E+03	1.10E+03	8.19E-03	4.56E-02
Fort Calhoun	PWR68	71	1.42E+00	4.47E+00	2.67E+03	7.57E+00	4.00E+03	1.10E+03	8.16E-03	4.55E-02
Ginna	PWR69	74	1.43E+00	4.49E+00	2.67E+03	7.59E+00	4.01E+03	1.10E+03	8.19E-03	4.56E-02
PWR Subtotal		**9845**								

TABLE F-3
ESTIMATED CONTAINER ACTIVITIES FOR GTCC LLW FROM US REACTORS
(continued)

Reactor	Reactor Number	No. H-SAMCs	Activity Per Container (Ci/container)							
			C-14	Mn-54	Fe-55	Ni-59	Co-60	Ni-63	Mo-93	Nb-94
Haddam Neck	SPWR1	29	4.39E+00	1.44E-05	1.10E+02	2.34E+01	1.32E+03	3.03E+03	2.52E-02	1.41E-01
Indian Point 1	SPWR2	10	4.28E+00	2.53E-13	4.05E-01	2.29E+01	7.18E+01	2.55E+03	2.45E-02	1.37E-01
Maine Yankee	SPWR3	43	4.38E+00	1.43E-05	1.10E+02	2.34E+01	1.32E+03	3.02E+03	2.51E-02	1.40E-01
Rancho Seco	SPWR4	44	4.39E+00	4.94E-08	1.87E+01	2.35E+01	5.28E+02	2.89E+03	2.52E-02	1.41E-01
San Onofre 1	SPWR5	22	4.27E+00	5.46E-07	3.89E+01	2.28E+01	7.62E+02	2.87E+03	2.45E-02	1.37E-01
Saxton	SPWR6	4	4.11E+00	4.81E-14	2.34E-01	2.20E+01	5.30E+01	2.41E+03	2.35E-02	1.32E-01
Yankee-Rowe	SPWR7	10	4.19E+00	2.38E-07	2.96E+01	2.23E+01	6.55E+02	2.79E+03	2.40E-02	1.34E-01
Zion 1	SPWR8	52	4.36E+00	7.22E-05	1.82E+02	2.33E+01	1.71E+03	3.05E+03	2.50E-02	1.40E-01
Zion 2	SPWR9	52	4.36E+00	7.22E-05	1.82E+02	2.33E+01	1.71E+03	3.05E+03	2.50E-02	1.40E-01
Shutdown PWR Subtotal		**266**								
GRAND TOTAL		**12796**								

TABLE F-4
ESTIMATED CONTAINER ACTIVITIES FOR GTCC LLW FROM US REACTORS

Reactor	Reactor Number	No. RH Cans.	Activity Per Container (Ci/container)							
			C-14	Mn-54	Fe-55	Ni-59	Co-60	Ni-63	Mo-93	Nb-94
Browns Ferry 1	BWR1	17	1.37E+01	8.60E+00	2.63E+04	8.33E+01	2.00E+04	1.10E+04	4.27E-02	1.96E-01
Browns Ferry 2	BWR2	18	1.36E+01	8.53E+00	2.61E+04	8.26E+01	1.98E+04	1.09E+04	4.23E-02	1.95E-01
Browns Ferry 3	BWR3	18	1.36E+01	8.50E+00	2.60E+04	8.23E+01	1.98E+04	1.09E+04	4.21E-02	1.94E-01
Fermi 2	BWR4	18	1.35E+01	8.47E+00	2.59E+04	8.21E+01	1.97E+04	1.08E+04	4.20E-02	1.94E-01
Hope Creek 1	BWR5	17	1.35E+01	8.47E+00	2.59E+04	8.20E+01	1.97E+04	1.08E+04	4.20E-02	1.93E-01
Peach Bottom 2	BWR6	18	1.36E+01	8.48E+00	2.60E+04	8.21E+01	1.97E+04	1.08E+04	4.21E-02	1.94E-01
Peach Bottom 3	BWR7	18	1.36E+01	8.48E+00	2.60E+04	8.21E+01	1.97E+04	1.08E+04	4.21E-02	1.94E-01
Susquehanna 1	BWR8	18	1.38E+01	8.66E+00	2.65E+04	8.38E+01	2.01E+04	1.11E+04	4.29E-02	1.98E-01
Susquehanna 2	BWR9	18	1.39E+01	8.70E+00	2.66E+04	8.42E+01	2.02E+04	1.11E+04	4.31E-02	1.99E-01
Limerick 1	BWR10	18	1.38E+01	8.65E+00	2.65E+04	8.38E+01	2.01E+04	1.11E+04	4.29E-02	1.98E-01
Limerick 2	BWR11	18	1.38E+01	8.65E+00	2.65E+04	8.38E+01	2.01E+04	1.11E+04	4.29E-02	1.98E-01
La Salle 1	BWR12	18	1.36E+01	8.53E+00	2.61E+04	8.26E+01	1.98E+04	1.09E+04	4.23E-02	1.95E-01
La Salle 2	BWR13	18	1.37E+01	8.54E+00	2.62E+04	8.27E+01	1.99E+04	1.09E+04	4.24E-02	1.95E-01
Nine Mile Point 2	BWR14	18	1.38E+01	8.66E+00	2.65E+04	8.39E+01	2.01E+04	1.11E+04	4.29E-02	1.98E-01
Columbia Generating Station	BWR15	18	1.37E+01	8.56E+00	2.62E+04	8.29E+01	1.99E+04	1.09E+04	4.24E-02	1.95E-01
Clinton	BWR16	17	1.35E+01	8.42E+00	2.58E+04	8.16E+01	1.96E+04	1.08E+04	4.18E-02	1.92E-01
River Bend 1	BWR17	16	1.33E+01	8.31E+00	2.54E+04	8.04E+01	1.93E+04	1.06E+04	4.12E-02	1.90E-01
Grand Gulf 1	BWR18	20	1.39E+01	8.72E+00	2.67E+04	8.44E+01	2.03E+04	1.11E+04	4.32E-02	1.99E-01
Perry 1	BWR19	20	1.35E+01	8.48E+00	2.60E+04	8.21E+01	1.97E+04	1.08E+04	4.20E-02	1.94E-01
Oyster Creek	BWR20	10	1.36E+01	8.50E+00	2.60E+04	8.23E+01	1.98E+04	1.09E+04	4.21E-02	1.94E-01
Nine Mile Point 1	BWR21	10	1.36E+01	8.52E+00	2.61E+04	8.25E+01	1.98E+04	1.09E+04	4.22E-02	1.95E-01
Dresden 2	BWR22	14	1.36E+01	8.50E+00	2.60E+04	8.23E+01	1.98E+04	1.09E+04	4.22E-02	1.94E-01
Dresden 3	BWR23	14	1.36E+01	8.50E+00	2.60E+04	8.23E+01	1.98E+04	1.09E+04	4.22E-02	1.94E-01
Quad Cities 1	BWR24	14	1.36E+01	8.50E+00	2.60E+04	8.23E+01	1.98E+04	1.09E+04	4.22E-02	1.94E-01
Quad Cities 2	BWR25	14	1.36E+01	8.50E+00	2.60E+04	8.23E+01	1.98E+04	1.09E+04	4.22E-02	1.94E-01
Pilgrim 1	BWR26	11	1.37E+01	8.55E+00	2.62E+04	8.28E+01	1.99E+04	1.09E+04	4.24E-02	1.95E-01
Monticello	BWR27	9	1.39E+01	8.68E+00	2.66E+04	8.41E+01	2.02E+04	1.11E+04	4.30E-02	1.98E-01

TABLE F-4
ESTIMATED CONTAINER ACTIVITIES FOR GTCC LLW FROM US REACTORS
(continued)

Reactor	Reactor Number	No. RH Cans.	Activity Per Container (Ci/container)							
			C-14	Mn-54	Fe-55	Ni-59	Co-60	Ni-63	Mo-93	Nb-94
Hatch 1	BWR28	14	1.36E+01	8.52E+00	2.61E+04	8.25E+01	1.98E+04	1.09E+04	4.23E-02	1.95E-01
Hatch 2	BWR29	14	1.38E+01	8.66E+00	2.65E+04	8.39E+01	2.01E+04	1.11E+04	4.29E-02	1.98E-01
Duane Arnold	BWR30	9	1.37E+01	8.58E+00	2.63E+04	8.31E+01	2.00E+04	1.10E+04	4.25E-02	1.96E-01
Cooper	BWR31	12	1.38E+01	8.65E+00	2.65E+04	8.38E+01	2.01E+04	1.11E+04	4.29E-02	1.98E-01
FitzPatrick	BWR32	14	1.32E+01	8.28E+00	2.53E+04	8.02E+01	1.92E+04	1.06E+04	4.10E-02	1.89E-01
Brunswick 1	BWR33	15	1.37E+01	8.59E+00	2.63E+04	8.31E+01	2.00E+04	1.10E+04	4.26E-02	1.96E-01
Brunswick 2	BWR34	15	1.32E+01	8.24E+00	2.52E+04	7.98E+01	1.92E+04	1.05E+04	4.08E-02	1.88E-01
Vermont Yankee	BWR35	8	1.39E+01	8.68E+00	2.66E+04	8.41E+01	2.02E+04	1.11E+04	4.31E-02	1.98E-01
BWR Subtotal		**538**								
Big Rock Point	SBWR1	1	1.73E+01	2.54E-05	5.73E+02	1.05E+02	3.08E+03	1.25E+04	5.37E-02	2.48E-01
Dresden 1	SBWR2	1	5.05E+01	1.52E-11	1.34E+01	3.07E+02	7.40E+02	3.19E+04	1.56E-01	7.23E-01
GE VBWR	SBWR3	1	3.71E+00	5.86E-18	2.20E-02	2.26E+01	7.58E+00	2.12E+03	1.15E-02	5.32E-02
Humboldt Bay 3	SBWR4	1	1.44E+01	8.57E-13	2.31E+00	8.77E+01	1.63E+02	8.99E+03	4.46E-02	2.07E-01
La Crosse	SBWR5	1	1.19E+01	5.27E-09	3.11E+01	7.24E+01	5.70E+02	8.00E+03	3.69E-02	1.71E-01
Millstone 1	SBWR6	2	7.27E+01	2.39E-04	3.10E+03	4.41E+02	1.47E+04	5.26E+04	2.25E-01	1.04E+00
Pathfinder	SBWR7	1	1.37E+01	5.53E-16	2.24E-01	8.33E+01	4.73E+01	8.03E+03	4.23E-02	1.96E-01
Shutdown BWR Subtotal		**8**								
Arkansas Nuclear 1	PWR1	25	7.13E+00	2.24E+01	1.34E+04	3.80E+01	2.01E+04	5.52E+03	4.09E-02	2.28E-01
Crystal River 3	PWR2	25	7.11E+00	2.24E+01	1.33E+04	3.78E+01	2.00E+04	5.50E+03	4.08E-02	2.27E-01
Davis-Besse	PWR3	26	7.12E+00	2.24E+01	1.33E+04	3.79E+01	2.00E+04	5.51E+03	4.09E-02	2.28E-01
Three Mile Island 1	PWR4	24	7.15E+00	2.25E+01	1.34E+04	3.81E+01	2.01E+04	5.54E+03	4.11E-02	2.29E-01
Oconee 1	PWR5	25	7.17E+00	2.26E+01	1.35E+04	3.82E+01	2.02E+04	5.55E+03	4.12E-02	2.29E-01
Oconee 2	PWR6	25	7.17E+00	2.26E+01	1.35E+04	3.82E+01	2.02E+04	5.55E+03	4.12E-02	2.29E-01
Oconee 3	PWR7	25	7.17E+00	2.26E+01	1.35E+04	3.82E+01	2.02E+04	5.55E+03	4.12E-02	2.29E-01
Turkey Point 4	PWR8	21	7.00E+00	2.20E+01	1.31E+04	3.72E+01	1.97E+04	5.41E+03	4.02E-02	2.24E-01
Turkey Point 3	PWR9	21	7.00E+00	2.20E+01	1.31E+04	3.72E+01	1.97E+04	5.41E+03	4.02E-02	2.24E-01
Prairie Island 1	PWR10	16	6.92E+00	2.18E+01	1.30E+04	3.68E+01	1.95E+04	5.35E+03	3.97E-02	2.21E-01
Prairie Island 2	PWR11	16	6.92E+00	2.18E+01	1.30E+04	3.68E+01	1.95E+04	5.35E+03	3.97E-02	2.21E-01

TABLE F-4
ESTIMATED CONTAINER ACTIVITIES FOR GTCC LLW FROM US REACTORS
(continued)

Reactor	Reactor Number	No. RH Cans.	Activity Per Container (Ci/container)							
			C-14	Mn-54	Fe-55	Ni-59	Co-60	Ni-63	Mo-93	Nb-94
Robinson 2	PWR12	21	7.17E+00	2.26E+01	1.34E+04	3.82E+01	2.02E+04	5.55E+03	4.11E-02	2.29E-01
Point Beach 1	PWR13	15	7.24E+00	2.28E+01	1.36E+04	3.85E+01	2.04E+04	5.60E+03	4.15E-02	2.31E-01
Point Beach 2	PWR14	16	6.86E+00	2.16E+01	1.29E+04	3.65E+01	1.93E+04	5.31E+03	3.94E-02	2.20E-01
Kewaunee	PWR15	17	6.98E+00	2.20E+01	1.31E+04	3.72E+01	1.96E+04	5.40E+03	4.01E-02	2.23E-01
Farley 1	PWR16	25	7.22E+00	2.27E+01	1.35E+04	3.84E+01	2.03E+04	5.58E+03	4.14E-02	2.31E-01
Farley 2	PWR17	26	7.01E+00	2.21E+01	1.32E+04	3.73E+01	1.97E+04	5.43E+03	4.03E-02	2.24E-01
Diablo Canyon 1	PWR18	32	7.20E+00	2.27E+01	1.35E+04	3.83E+01	2.03E+04	5.57E+03	4.13E-02	2.30E-01
Diablo Canyon 2	PWR19	32	7.20E+00	2.27E+01	1.35E+04	3.83E+01	2.03E+04	5.57E+03	4.13E-02	2.30E-01
Millstone 3	PWR20	34	7.20E+00	2.27E+01	1.35E+04	3.83E+01	2.03E+04	5.57E+03	4.13E-02	2.30E-01
Vogtle 1	PWR21	34	7.18E+00	2.26E+01	1.35E+04	3.82E+01	2.02E+04	5.56E+03	4.12E-02	2.30E-01
Vogtle 2	PWR22	34	7.16E+00	2.25E+01	1.34E+04	3.81E+01	2.01E+04	5.54E+03	4.11E-02	2.29E-01
Braidwood 1	PWR23	35	7.13E+00	2.25E+01	1.34E+04	3.80E+01	2.01E+04	5.52E+03	4.10E-02	2.28E-01
Braidwood 2	PWR24	34	7.18E+00	2.26E+01	1.35E+04	3.82E+01	2.02E+04	5.56E+03	4.12E-02	2.30E-01
Byron 1	PWR25	34	7.26E+00	2.28E+01	1.36E+04	3.86E+01	2.04E+04	5.62E+03	4.17E-02	2.32E-01
Byron 2	PWR26	34	7.08E+00	2.23E+01	1.33E+04	3.77E+01	1.99E+04	5.48E+03	4.07E-02	2.27E-01
Wolf Creek 1	PWR27	34	7.27E+00	2.29E+01	1.36E+04	3.87E+01	2.04E+04	5.63E+03	4.17E-02	2.33E-01
D.C. Cook 1	PWR28	30	7.18E+00	2.26E+01	1.35E+04	3.82E+01	2.02E+04	5.56E+03	4.12E-02	2.30E-01
D.C. Cook 2	PWR29	32	7.13E+00	2.25E+01	1.34E+04	3.80E+01	2.01E+04	5.52E+03	4.10E-02	2.28E-01
Callaway	PWR30	34	7.09E+00	2.23E+01	1.33E+04	3.77E+01	1.99E+04	5.49E+03	4.07E-02	2.27E-01
Seabrook 1	PWR31	34	7.23E+00	2.27E+01	1.36E+04	3.85E+01	2.03E+04	5.59E+03	4.15E-02	2.31E-01
Salem 1	PWR32	35	7.11E+00	2.24E+01	1.33E+04	3.79E+01	2.00E+04	5.50E+03	4.08E-02	2.27E-01
Salem 2	PWR33	33	7.26E+00	2.28E+01	1.36E+04	3.86E+01	2.04E+04	5.62E+03	4.17E-02	2.32E-01
Indian Point 2	PWR34	29	7.16E+00	2.25E+01	1.34E+04	3.81E+01	2.01E+04	5.54E+03	4.11E-02	2.29E-01
Indian Point 3	PWR35	29	7.24E+00	2.28E+01	1.36E+04	3.86E+01	2.04E+04	5.61E+03	4.16E-02	2.32E-01
Harris 1	PWR36	27	7.07E+00	2.22E+01	1.33E+04	3.76E+01	1.99E+04	5.47E+03	4.06E-02	2.26E-01
McGuire 1	PWR37	33	7.07E+00	2.22E+01	1.33E+04	3.76E+01	1.99E+04	5.47E+03	4.06E-02	2.26E-01
McGuire 2	PWR38	33	7.07E+00	2.22E+01	1.33E+04	3.76E+01	1.99E+04	5.47E+03	4.06E-02	2.26E-01
Beaver Valley 1	PWR39	24	7.25E+00	2.28E+01	1.36E+04	3.86E+01	2.04E+04	5.61E+03	4.16E-02	2.32E-01
Beaver Valley 2	PWR40	25	7.05E+00	2.22E+01	1.32E+04	3.75E+01	1.98E+04	5.45E+03	4.05E-02	2.25E-01

TABLE F-4
ESTIMATED CONTAINER ACTIVITIES FOR GTCC LLW FROM US REACTORS
(continued)

Reactor	Reactor Number	No. RH Cans.	Activity Per Container (Ci/container)							
			C-14	Mn-54	Fe-55	Ni-59	Co-60	Ni-63	Mo-93	Nb-94
Catawba 1	PWR41	33	7.25E+00	2.28E+01	1.36E+04	3.86E+01	2.04E+04	5.61E+03	4.16E-02	2.32E-01
Catawba 2	PWR42	33	7.25E+00	2.28E+01	1.36E+04	3.86E+01	2.04E+04	5.61E+03	4.16E-02	2.32E-01
Summer	PWR43	29	7.06E+00	2.22E+01	1.32E+04	3.76E+01	1.99E+04	5.46E+03	4.05E-02	2.26E-01
Sequoyah 1	PWR44	34	7.17E+00	2.26E+01	1.34E+04	3.82E+01	2.02E+04	5.55E+03	4.12E-02	2.29E-01
Sequoyah 2	PWR45	33	7.24E+00	2.28E+01	1.36E+04	3.85E+01	2.04E+04	5.60E+03	4.16E-02	2.32E-01
Watts Bar 1	PWR46	33	7.20E+00	2.27E+01	1.35E+04	3.83E+01	2.03E+04	5.57E+03	4.13E-02	2.30E-01
Comanche Peak 1	PWR47	34	7.17E+00	2.26E+01	1.34E+04	3.82E+01	2.02E+04	5.55E+03	4.12E-02	2.29E-01
Comanche Peak 2	PWR48	34	7.17E+00	2.26E+01	1.34E+04	3.82E+01	2.02E+04	5.55E+03	4.12E-02	2.29E-01
South Texas 1	PWR49	38	7.14E+00	2.25E+01	1.34E+04	3.80E+01	2.01E+04	5.53E+03	4.10E-02	2.28E-01
South Texas 2	PWR50	38	7.14E+00	2.25E+01	1.34E+04	3.80E+01	2.01E+04	5.53E+03	4.10E-02	2.28E-01
Surry 1	PWR51	24	7.06E+00	2.22E+01	1.32E+04	3.76E+01	1.99E+04	5.46E+03	4.05E-02	2.26E-01
Surry 2	PWR52	24	7.06E+00	2.22E+01	1.32E+04	3.76E+01	1.99E+04	5.46E+03	4.05E-02	2.26E-01
North Anna 1	PWR53	27	7.26E+00	2.29E+01	1.36E+04	3.87E+01	2.04E+04	5.62E+03	4.17E-02	2.32E-01
North Anna 2	PWR54	27	7.20E+00	2.27E+01	1.35E+04	3.83E+01	2.03E+04	5.57E+03	4.13E-02	2.30E-01
Palo Verde 1	PWR55	37	7.12E+00	2.24E+01	1.34E+04	3.79E+01	2.00E+04	5.51E+03	4.09E-02	2.28E-01
Palo Verde 2	PWR56	39	7.14E+00	2.25E+01	1.34E+04	3.80E+01	2.01E+04	5.53E+03	4.10E-02	2.28E-01
Palo Verde 3	PWR57	37	7.14E+00	2.25E+01	1.34E+04	3.80E+01	2.01E+04	5.53E+03	4.10E-02	2.29E-01
Arkansas Nuclear 2	PWR58	30	7.04E+00	2.21E+01	1.32E+04	3.75E+01	1.98E+04	5.45E+03	4.04E-02	2.25E-01
San Onofre 2	PWR59	32	7.09E+00	2.23E+01	1.33E+04	3.77E+01	1.99E+04	5.48E+03	4.07E-02	2.27E-01
San Onofre 3	PWR60	32	7.15E+00	2.25E+01	1.34E+04	3.81E+01	2.01E+04	5.54E+03	4.11E-02	2.29E-01
Millstone 2	PWR61	26	7.19E+00	2.26E+01	1.35E+04	3.83E+01	2.02E+04	5.57E+03	4.13E-02	2.30E-01
Saint Lucie 1	PWR62	25	7.11E+00	2.24E+01	1.33E+04	3.79E+01	2.00E+04	5.50E+03	4.08E-02	2.28E-01
Saint Lucie 2	PWR63	25	7.11E+00	2.24E+01	1.33E+04	3.79E+01	2.00E+04	5.50E+03	4.08E-02	2.28E-01
Waterford 3	PWR64	32	7.20E+00	2.27E+01	1.35E+04	3.83E+01	2.03E+04	5.57E+03	4.13E-02	2.30E-01
Calvert Cliffs 1	PWR65	26	7.12E+00	2.24E+01	1.33E+04	3.79E+01	2.00E+04	5.51E+03	4.09E-02	2.28E-01
Calvert Cliffs 2	PWR66	26	7.03E+00	2.21E+01	1.32E+04	3.74E+01	1.98E+04	5.44E+03	4.03E-02	2.25E-01
Palisades	PWR67	23	7.07E+00	2.22E+01	1.33E+04	3.76E+01	1.99E+04	5.47E+03	4.06E-02	2.26E-01
Fort Calhoun	PWR68	14	7.21E+00	2.27E+01	1.35E+04	3.84E+01	2.03E+04	5.58E+03	4.14E-02	2.31E-01
Ginna	PWR69	15	7.03E+00	2.21E+01	1.32E+04	3.74E+01	1.98E+04	5.44E+03	4.04E-02	2.25E-01

TABLE F-4
ESTIMATED CONTAINER ACTIVITIES FOR GTCC LLW FROM US REACTORS
(continued)

Reactor	Reactor Number	No. RH Cans.	Activity Per Container (Ci/container)							
			C-14	Mn-54	Fe-55	Ni-59	Co-60	Ni-63	Mo-93	Nb-94
PWR Subtotal		**1964**								
Haddam Neck	SPWR1	7	1.82E+01	5.95E-05	4.57E+02	9.71E+01	5.49E+03	1.26E+04	1.04E-01	5.83E-01
Indian Point 1	SPWR2	3	1.43E+01	8.44E-13	1.35E+00	7.63E+01	2.39E+02	8.49E+03	8.17E-02	4.58E-01
Maine Yankee	SPWR3	10	1.88E+01	6.16E-05	4.73E+02	1.01E+02	5.68E+03	1.30E+04	1.08E-01	6.04E-01
Rancho Seco	SPWR4	10	1.93E+01	2.17E-07	8.22E+01	1.03E+02	2.32E+03	1.27E+04	1.11E-01	6.20E-01
San Onofre 1	SPWR5	5	1.88E+01	2.40E-06	1.71E+02	1.00E+02	3.35E+03	1.26E+04	1.08E-01	6.02E-01
Saxton	SPWR6	1	1.65E+01	1.92E-13	9.36E-01	8.80E+01	2.12E+02	9.66E+03	9.42E-02	5.28E-01
Yankee-Rowe	SPWR7	3	1.40E+01	7.93E-07	9.85E+01	7.45E+01	2.18E+03	9.31E+03	8.00E-02	4.47E-01
Zion 1	SPWR8	12	1.89E+01	3.13E-04	7.89E+02	1.01E+02	7.42E+03	1.32E+04	1.08E-01	6.06E-01
Zion 2	SPWR9	12	1.89E+01	3.13E-04	7.89E+02	1.01E+02	7.42E+03	1.32E+04	1.08E-01	6.06E-01
Shutdown PWR Subtotal		**63**								
GRAND TOTAL		**2573**								

APPENDIX G
ESTIMATED GTCC LLW DISPOSAL PACKAGES FOR VARIOUS DISPOSAL CONFIGURATIONS

The values shown in Table G.1 were calculated as described in Section 4.

TABLE G-1
ESTIMATED GTCC LLW DISPOSAL PACKAGES FOR VARIOUS DISPOSAL CONFIGURATIONS

Reactor	Reactor Number	Number of 3-packs			Number of 7-packs
		AMCs	Pb-SAMCs	H-SAMCs	H-SAMCs
Browns Ferry-1	BWR1	3	8	29	13
Browns Ferry-2	BWR2	3	8	30	13
Browns Ferry-3	BWR3	3	8	30	13
Fermi-2	BWR4	3	8	30	13
Hope Creek-1	BWR5	3	8	28	12
Peach Bottom-2	BWR6	3	8	30	13
Peach Bottom-3	BWR7	3	8	30	13
Susquehanna-1	BWR8	3	8	31	13
Susquehanna-2	BWR9	3	8	31	13
Limerick-1	BWR10	3	8	30	13
Limerick-2	BWR11	3	8	30	13
LaSalle County-1	BWR12	3	8	30	13
LaSalle County-2	BWR13	3	8	30	13
Nine Mile Point-2	BWR14	3	8	31	13
Columbia Generating Sta.	BWR15	3	8	30	13
Clinton	BWR16	3	7	28	12
River Bend-1	BWR17	3	7	26	11
Grand Gulf-1	BWR18	3	9	34	15
Perry-1	BWR19	3	9	33	14
Oyster Creek-1	BWR20	2	5	17	8
Nine Mile Point-1	BWR21	2	5	17	8
Dresden-2	BWR22	2	6	23	10
Dresden-3	BWR23	2	6	23	10
Quad Cities-1	BWR24	2	6	23	10
Quad Cities-2	BWR25	2	6	23	10
Pilgrim-1	BWR26	2	5	19	8
Monticello	BWR27	2	4	16	7
Edwin I. Hatch-1	BWR28	2	6	23	10
Edwin I. Hatch-2	BWR29	2	6	24	11
Duane Arnold	BWR30	2	4	15	7
Cooper	BWR31	2	6	20	9
James Fitzpatrick	BWR32	2	6	23	10
Brunswick-1	BWR33	3	7	25	11
Brunswick-2	BWR34	2	7	24	11
Vermont Yankee-1	BWR35	2	4	14	6
BWR Subtotal		**90**	**241**	**900**	**392**

TABLE G-1
ESTIMATED GTCC LLW DISPOSAL PACKAGES FOR VARIOUS DISPOSAL CONFIGURATIONS
(continued)

Reactor	Reactor Number	Number of 3-packs			Number of 7-packs
		AMCs	Pb-SAMCs	H-SAMCs	H-SAMCs
Big Rock Point	SBWR1	1	1	1	1
Dresden-1	SBWR2	1	2	1	1
GE VBWR	SBWR3	1	1	1	1
Humboldt Bay-3	SBWR4	1	1	1	1
La Crosse	SBWR5	1	1	1	1
Millstone-1	SBWR6	2	5	3	2
Pathfinder	SBWR7	1	1	1	1
Shutdown BWR Subtotal		**8**	**12**	**9**	**8**
Arkansas Nuclear-1	PWR1	3	9	42	18
Crystal River-3	PWR2	3	9	42	18
Davis-Besse	PWR3	3	10	44	19
Three Mile Island-1	PWR4	3	9	41	18
Oconee-1	PWR5	3	9	42	18
Oconee-2	PWR6	3	9	42	18
Oconee-3	PWR7	3	9	42	18
Turkey Point- 4	PWR8	3	8	35	15
Turkey Point-3	PWR9	3	8	35	15
Prairie Island-1	PWR10	2	6	26	12
Prairie Island-2	PWR11	2	6	26	12
H.B. Robinson-2	PWR12	3	8	36	16
Point Beach-1	PWR13	2	6	26	11
Point Beach-2	PWR14	2	6	26	11
Kewaunee	PWR15	2	6	28	12
Joseph M. Farley-1	PWR16	3	9	43	19
Joseph M. Farley-2	PWR17	3	9	43	19
Diablo Canyon-1	PWR18	4	12	54	24
Diablo Canyon-2	PWR19	4	12	54	24
Millstone-3	PWR20	4	13	58	25
Vogtle-1	PWR21	4	13	57	25
Vogtle-2	PWR22	4	12	57	25
Braidwood-1	PWR23	4	13	59	25
Braidwood-2	PWR24	4	13	57	25
Byron-1	PWR25	4	13	58	25
Byron-2	PWR26	4	12	57	25
Wolf Creek-1	PWR27	4	13	58	25
D.C. Cook-1	PWR28	4	11	51	22
D.C. Cook-2	PWR29	4	12	54	23
Callaway	PWR30	4	12	57	25
Seabrook-1	PWR31	4	13	58	25
Salem-1	PWR32	4	13	58	25

TABLE G-1
ESTIMATED GTCC LLW DISPOSAL PACKAGES FOR VARIOUS DISPOSAL CONFIGURATIONS
(continued)

Reactor	Reactor Number	Number of 3-packs			Number of 7-packs
		AMCs	Pb-SAMCs	H-SAMCs	H-SAMCs
Salem-2	PWR33	4	12	56	24
Indian Point-2	PWR34	4	11	49	21
Indian Point-3	PWR35	4	11	49	21
Shearon Harris-1	PWR36	3	10	45	20
McGuire-1	PWR37	4	12	55	24
McGuire-2	PWR38	4	12	55	24
Beaver Valley-1	PWR39	3	9	41	18
Beaver Valley-2	PWR40	3	9	42	18
Catawba-1	PWR41	4	12	56	24
Catawba-2	PWR42	4	12	56	24
Summer	PWR43	4	11	48	21
Sequoyah-1	PWR44	4	13	57	25
Sequoyah-2	PWR45	4	12	56	24
Watts Bar-1	PWR46	4	12	56	24
Comanche Peak-1	PWR47	4	13	57	25
Comanche Peak-2	PWR48	4	13	57	25
South Texas Project-1	PWR49	5	14	64	28
South Texas Project-2	PWR50	5	14	64	28
Surry-1	PWR51	3	9	40	17
Surry-2	PWR52	3	9	40	17
North Anna-1	PWR53	4	10	46	20
North Anna-2	PWR54	4	10	46	20
Palo Verde-1	PWR55	5	13	62	27
Palo Verde-2	PWR56	5	14	65	28
Palo Verde-3	PWR57	5	14	62	27
Arkansas Nuclear-2	PWR58	4	11	50	22
San Onofre-2	PWR59	4	12	53	23
San Onofre-3	PWR60	4	12	54	23
Millstone-2	PWR61	3	10	44	19
St Lucie-1	PWR62	3	9	42	18
St Lucie-2	PWR63	3	9	42	18
Waterford-3	PWR64	4	12	54	24
Calvert Cliffs-1	PWR65	3	10	44	19
Calvert Cliffs-2	PWR66	3	9	43	19
Palisades	PWR67	3	9	38	17
Fort Calhoun	PWR68	2	5	24	11
Ginna	PWR69	2	6	25	11
PWR Subtotal		**244**	**728**	**3303**	**1435**
Haddam Neck	SPWR1	3	7	10	5
Indian Point-1	SPWR2	1	3	4	2

TABLE G-1
ESTIMATED GTCC LLW DISPOSAL PACKAGES FOR VARIOUS DISPOSAL CONFIGURATIONS
(continued)

Reactor	Reactor Number	Number of 3-packs			Number of 7-packs
		AMCs	Pb-SAMCs	H-SAMCs	H-SAMCs
Maine Yankee	SPWR3	3	10	15	7
Rancho Seco	SPWR4	4	10	15	7
San Onofre-1	SPWR5	2	5	8	4
Saxton	SPWR6	1	1	2	1
Yankee-Rowe	SPWR7	1	3	4	2
Zion-1	SPWR8	4	12	18	8
Zion-2	SPWR9	4	12	18	8
Shutdown PWR Subtotal		**23**	**63**	**94**	**44**
GRAND TOTAL		**365**	**1044**	**4306**	**1879**

APPENDIX H
ESTIMATED GTCC LLW SHIPMENTS FROM US REACTORS

The values shown in Table H.1 were calculated as described in Section 4.

TABLE H-1
ESTIMATED GTCC LLW SHIPMENTS FROM US REACTORS

Reactor	Reactor Number	Number Shipping Containers and Number of Shipments			
		All Rail AMCs	All Rail Pb-SAMCs	All Truck H-SAMCs	All Truck RH Canisters
Browns Ferry-1	BWR1	3	8	85	17
Browns Ferry-2	BWR2	3	8	89	18
Browns Ferry-3	BWR3	3	8	89	18
Fermi-2	BWR4	3	8	89	18
Hope Creek-1	BWR5	3	8	84	17
Peach Bottom-2	BWR6	3	8	89	18
Peach Bottom-3	BWR7	3	8	89	18
Susquehanna-1	BWR8	3	8	91	18
Susquehanna-2	BWR9	3	8	91	18
Limerick-1	BWR10	3	8	90	18
Limerick-2	BWR11	3	8	90	18
LaSalle County-1	BWR12	3	8	89	18
LaSalle County-2	BWR13	3	8	89	18
Nine Mile Point-2	BWR14	3	8	91	18
Columbia Generating Sta.	BWR15	3	8	90	18
Clinton	BWR16	3	7	83	17
River Bend-1	BWR17	3	7	77	16
Grand Gulf-1	BWR18	3	9	101	20
Perry-1	BWR19	3	9	98	20
Oyster Creek-1	BWR20	2	5	50	10
Nine Mile Point-1	BWR21	2	5	50	10
Dresden-2	BWR22	2	6	69	14
Dresden-3	BWR23	2	6	69	14
Quad Cities-1	BWR24	2	6	69	14
Quad Cities-2	BWR25	2	6	69	14
Pilgrim-1	BWR26	2	5	55	11
Monticello	BWR27	2	4	46	9
Edwin I. Hatch-1	BWR28	2	6	69	14
Edwin I. Hatch-2	BWR29	2	6	71	14
Duane Arnold	BWR30	2	4	45	9
Cooper	BWR31	2	6	60	12
James Fitzpatrick	BWR32	2	6	67	14
Brunswick-1	BWR33	3	7	75	15
Brunswick-2	BWR34	2	7	72	15
Vermont Yankee-1	BWR35	2	4	41	8
BWR Subtotal		**90**	**241**	**2671**	**538**

TABLE H-1
ESTIMATED GTCC LLW SHIPMENTS FROM US REACTORS
(continued)

Reactor	Reactor Number	Number Shipping Containers and Number of Shipments			
		All Rail AMCs	All Rail Pb-SAMCs	All Truck H-SAMCs	All Truck RH Canisters
Big Rock Point	SBWR1	1	1	1	1
Dresden-1	SBWR2	1	2	1	1
GE VBWR	SBWR3	1	1	1	1
Humboldt Bay-3	SBWR4	1	1	1	1
La Crosse	SBWR5	1	1	1	1
Millstone-1	SBWR6	2	5	8	2
Pathfinder	SBWR7	1	1	1	1
Shutdown BWR Total		**8**	**12**	**14**	**8**
Arkansas Nuclear-1	PWR1	3	9	125	25
Crystal River-3	PWR2	3	9	125	25
Davis-Besse	PWR3	3	10	130	26
Three Mile Island-1	PWR4	3	9	121	24
Oconee-1	PWR5	3	9	126	25
Oconee-2	PWR6	3	9	126	25
Oconee-3	PWR7	3	9	126	25
Turkey Point- 4	PWR8	3	8	103	21
Turkey Point-3	PWR9	3	8	103	21
Prairie Island-1	PWR10	2	6	78	16
Prairie Island-2	PWR11	2	6	78	16
H.B. Robinson-2	PWR12	3	8	106	21
Point Beach-1	PWR13	2	6	76	15
Point Beach-2	PWR14	2	6	77	16
Kewaunee	PWR15	2	6	83	17
Joseph M. Farley-1	PWR16	3	9	127	25
Joseph M. Farley-2	PWR17	3	9	128	26
Diablo Canyon-1	PWR18	4	12	162	32
Diablo Canyon-2	PWR19	4	12	162	32
Millstone-3	PWR20	4	13	172	34
Vogtle-1	PWR21	4	13	171	34
Vogtle-2	PWR22	4	12	171	34
Braidwood-1	PWR23	4	13	175	35
Braidwood-2	PWR24	4	13	171	34
Byron-1	PWR25	4	13	173	34
Byron-2	PWR26	4	12	169	34
Wolf Creek-1	PWR27	4	13	173	34
D.C. Cook-1	PWR28	4	11	151	30

TABLE H-1
ESTIMATED GTCC LLW SHIPMENTS FROM US REACTORS
(continued)

Reactor	Reactor Number	Number Shipping Containers and Number of Shipments			
		All Rail AMCs	All Rail Pb-SAMCs	All Truck H-SAMCs	All Truck RH Canisters
D.C. Cook-2	PWR29	4	12	160	32
Callaway	PWR30	4	12	169	34
Seabrook-1	PWR31	4	13	172	34
Salem-1	PWR32	4	13	174	35
Salem-2	PWR33	4	12	168	33
Indian Point-2	PWR34	4	11	146	29
Indian Point-3	PWR35	4	11	147	29
Shearon Harris-1	PWR36	3	10	134	27
McGuire-1	PWR37	4	12	164	33
McGuire-2	PWR38	4	12	164	33
Beaver Valley-1	PWR39	3	9	122	24
Beaver Valley-2	PWR40	3	9	124	25
Catawba-1	PWR41	4	12	168	33
Catawba-2	PWR42	4	12	168	33
Summer	PWR43	4	11	144	29
Sequoyah-1	PWR44	4	13	171	34
Sequoyah-2	PWR45	4	12	168	33
Watts Bar-1	PWR46	4	12	167	33
Comanche Peak-1	PWR47	4	13	171	34
Comanche Peak-2	PWR48	4	13	171	34
South Texas Project-1	PWR49	5	14	190	38
South Texas Project-2	PWR50	5	14	190	38
Surry-1	PWR51	3	9	119	24
Surry-2	PWR52	3	9	119	24
North Anna-1	PWR53	4	10	138	27
North Anna-2	PWR54	4	10	136	27
Palo Verde-1	PWR55	5	13	185	37
Palo Verde-2	PWR56	5	14	195	39
Palo Verde-3	PWR57	5	14	185	37
Arkansas Nuclear-2	PWR58	4	11	148	30
San Onofre-2	PWR59	4	12	159	32
San Onofre-3	PWR60	4	12	161	32
Millstone-2	PWR61	3	10	131	26
St Lucie-1	PWR62	3	9	125	25
St Lucie-2	PWR63	3	9	125	25
Waterford-3	PWR64	4	12	162	32
Calvert Cliffs-1	PWR65	3	10	130	26
Calvert Cliffs-2	PWR66	3	9	128	26
Palisades	PWR67	3	9	114	23
Fort Calhoun	PWR68	2	5	71	14

TABLE H-1
ESTIMATED GTCC LLW SHIPMENTS FROM US REACTORS
(continued)

Reactor	Reactor Number	Number Shipping Containers and Number of Shipments			
		All Rail AMCs	All Rail Pb-SAMCs	All Truck H-SAMCs	All Truck RH Canisters
Ginna	PWR69	2	6	74	15
PWR Subtotal		**244**	**728**	**9845**	**1964**
Haddam Neck	SPWR1	3	7	29	7
Indian Point-1	SPWR2	1	3	10	3
Maine Yankee	SPWR3	3	10	43	10
Rancho Seco	SPWR4	4	10	44	10
San Onofre-1	SPWR5	2	5	22	5
Saxton	SPWR6	1	1	4	1
Yankee-Rowe	SPWR7	1	3	10	3
Zion-1	SPWR8	4	12	52	12
Zion-2	SPWR9	4	12	52	12
Shutdown PWR Subtotal		**23**	**63**	**266**	**63**
GRAND TOTAL		**365**	**1044**	**12796**	**2573**

APPENDIX I

Supporting Sealed Source Waste Inventory Estimates for the Greater-Than-Class-C Low-Level Radioactive Waste Environmental Impact Statement Evaluations

Schelling, J. and J. R. Trone

547038

EIS PRIVILEGED

Supporting Sealed Source Waste Inventory Estimates for the Greater-Than-Class-C Low-Level Radioactive Waste Environmental Impact Statement Evaluations

Author:	Joe Schelling		9/27/07
	Print	Signature	Date
Author:	Janis Trone		9/27/07
	Print	Signature	Date
Technical Review:	Ahmed Ismail		9/27/2007
	Print	Signature	Date
Management Review:	Christi Leigh		9/28/07
	Print	Signature	Date

GTCC-EIS:AR:3.2:545078

Contents

1 Introduction 3

2 Sealed Source Inventory 3

2.1 Commercial Pu-238, Pu-239 and Am-241 Sources 3

2.2 Cm-244, Pu-240, Am-243 Sealed Source Inventory 4

2.3 Cs-137 Sealed Source Inventory 6

3 References 45

List of Tables

Table 1 Commercial ^{238}Pu, ^{239}Pu and ^{241}Am Sources[a] 4
Table 2 NRC and DOE Sealed Sources Included in the GTCC LLW EIS Inventory 5
Table 3 Radionuclide Half-lives 6
Table 4 Cs-137 Sources Included in the GTCC LLW EIS Inventory 7

1 Introduction

The focus of the upcoming Greater-Than-Class-C (GTCC) low-level radioactive waste (LLW) Disposal Environmental Impact Statement (EIS) is to evaluate the potential environmental impacts from the construction, operation, closure and post-closure performance of a disposal facility for GTCC LLW and potentially Department of Energy (DOE) GTCC-like waste. This document presents estimates of the GTCC LLW sealed source inventory.

2 Sealed Source Inventory

Sealed source inventory information was obtained from the NRC Interim Sealed Source Database (ISSD), the DOE Radiological Source Registry and Tracking (RSRT) System Database, and forecasts of projected GTCC LLW sources based on source recovery rates from the Off-Site Source Recovery Project (OSRP) (U. S. DOE 2007a).

2.1 Commercial Pu-238, Pu-239 and Am-241 Sources

Commercial sources generated before 2007 were transferred to the DOE and disposed of at the Waste Isolation Pilot Plant (WIPP), therefore there are no GTCC LLW commercial ^{238}Pu, ^{239}Pu, and ^{241}Am sources in storage. Because the ISSD is unlikely to have identified all GTCC LLW sources containing the long-lived nuclides ^{238}Pu, ^{239}Pu, and ^{241}Am, the projected inventory of these sources was based on OSRP recovery rates, rather than the ISSD. Estimates of the projected inventory based on OSRP recovery rates (U. S. DOE 2007a) include 8,634 ^{238}Pu (5.07 Ci each), 1,819 ^{239}Pu (1.67 Ci each), and 44,079 ^{241}Am (1.26 Ci each) sources, for a total additional increment of 1.01E+05 Ci in 54,262 sources, see Table 1. These sources are assumed to be conservatively packaged as neutron sources (35 Ci/55-gal. drum for ^{238}Pu and ^{241}Am, and 12.4 Ci/55-gal. drum for ^{239}Pu).

Table 1 Commercial ^{238}Pu, ^{239}Pu and ^{241}Am Sources[a]

Nuclide	Number of Sources	Activity per source (ci)	Total Activity (ci)
^{238}Pu-	8634	5.07	4.38E+04
^{239}Pu	1819	1.67	3.04E+03
^{241}Am	44079	1.26	5.55E+04
Total	54262		

[a] Data source (U. S. DOE 2007a)

2.2 Cm-244, Pu-240, Am-243 Sealed Source Inventory

The twenty-three sealed sources being included in the GTCC LLW EIS from the NRC ISSD and DOE RSRT databases are shown in Table 2. In deciding which sources to include in the inventory for the GTCC LLW EIS, any sources that had nuclides that do not appear in the *Licensing Requirements for Land Disposal of Radioactive Waste: Waste Classification* (10 CFR 61) tables that define GTCC LLW were eliminated (U. S. DOE 2007a). Any sources that identified a disposition path were also eliminated. Any sealed sources that could be disposed of as Class A, B, or C LLW were eliminated (U. S. DOE 2007a) using the After Concentration Averaging [ACA] method described in (NRC 1995a), which averages activity over the volume of a 55-gallon drum.

Activities for sources from the ISSD were given for the reference date of 1/1/2007; RSRT sources were therefore also decayed to 1/1/2007 using the standard decay equation:

$$A(t) = A_0 \, e^{-\ln(2)\, t \,/\, \tau}, \qquad (1)$$

where

A(t) is the activity in curies at time t (the decay time),

A_0 is the initial activity at the time of reactor shutdown, and

τ is the half-life (KAPL 2002). See Table 3.

This formulation of Equation 1 only shows the decay term as the production term (i.e., ingrowth) for the radionuclides being considered here is zero.

-

Table 2 NRC and DOE Sealed Sources Included in the GTCC LLW EIS Inventory

#	Type	Nuclide	Assay Date	Activity at Time of Assay (Ci)	2007 Activity (Ci)	Packaging Limit (Ci)	Packaging Criteria	2019 Activity (Ci)
1	DOE	Cm-244	12/1/2003	1.00E+01	8.88E+00	540	DOT A1	5.61E+00
2	DOE	Cm-244	2/11/2002	1.64E-01	1.36E-01	540	DOT A1	8.59E-02
3	DOE	Cm-244	2/11/2002	1.64E-01	1.36E-01	540	DOT A1	8.59E-02
4	DOE	Cm-244	2/11/1990	1.60E-01	8.38E-02	540	DOT A1	5.29E-02
5	DOE	Cm-244	10/7/1988	1.60E-01	7.96E-02	540	DOT A1	5.03E-02
6	DOE	Cm-244	10/7/1988	1.60E-01	7.96E-02	540	DOT A1	5.03E-02
7	DOE	Cm-244	10/7/1988	1.60E-01	7.96E-02	540	DOT A1	5.03E-02
8	DOE	Cm-244	10/7/1988	1.60E-01	7.96E-02	540	DOT A1	5.03E-02
9	DOE	Cm-244	10/7/1988	1.60E-01	7.96E-02	540	DOT A1	5.03E-02
10	DOE	Cm-244	2/11/2002[a]	8.09E-02	6.71E-02	540	DOT A1	4.24E-02
11	DOE	Cm-244	2/11/2002	7.00E-02	5.80E-02	540	DOT A1	3.67E-02
12	DOE	Cm-244	2/27/2002	6.68E-02	5.54E-02	540	DOT A1	3.50E-02
13	DOE	Cm-244	6/1/2004	6.00E-02	5.43E-02	540	DOT A1	3.43E-02
				Stored Subtotal	**9.87E+00**			**6.24E+00**
14	DOE	Am-243	6/30/1993	3.52E-01	3.52E-01	140	DOT A1	3.51E-01
15	DOE	Cm-244	6/30/1993	8.05E+01	4.80E+01	540	DOT A1	3.03E+01
16	DOE	Cm-244	1/21/1985	3.29E-01	1.42E-01	540	DOT A1	8.96E-02
17	DOE	Cm-244	1/21/1985	3.18E-01	1.37E-01	540	DOT A1	8.66E-02
18	DOE	Cm-244	11/1/1988	1.60E-01	7.98E-02	540	DOT A1	5.04E-02
19	DOE	Cm-244	5/12/2004	1.40E-01	1.26E-01	540	DOT A1	7.96E-02
20	DOE	Cm-244	5/21/2004	1.18E-01	1.07E-01	540	DOT A1	6.77E-02
21	DOE	Cm-244	5/19/2004	8.01E-02	7.24E-02	540	DOT A1	4.57E-02
22	DOE	Pu-240	3/11/1992	2.21E+01	2.21E+01	27	DOT A1	2.21E+01
23	Commercial	Cm-244	b	b	2.20E+01	540	DOT A1	1.39E+01
				Projected Subtotal	**9.31E+01**			**6.71E+01**
				Total	**1.03E+02**			**7.33E+01**

[a] Assay date not provided. Assumed assay date of 2/11/02.
b Activities provided by the NRC were as of 1/1/2007.

Table 3 Radionuclide Half-lives

Isotope	Half-life (yr)
Am-243	7370.00
Cm-244	18.10
Cs-137	30.07
Pu-240	6560.00

2.3 Cs-137 Sealed Source Inventory

The 1,481 ^{137}Cs sources being included in the GTCC LLW EIS are shown in Table 4. The ^{137}Cs sources are assumed to be disposed of individually as shielded devices of 0.71 m^3 volume each. The stored inventory includes 12 DOE ^{137}Cs sources for a volume of 8.52 m^3. The projected inventory includes 1,043 m^3 for 34 DOE and 1,435 commercial ^{137}Cs sources. The total of both the stored and projected inventory is 1,052 m^3. The total current activity as of 1/1/2007 is 2.38 MCi. These radionuclide activities will be decayed for twelve years, to 2019, using the standard decay equation 1. This will result in a total activity of 1.81 MCi in 2019.

Table 4 Cs-137 Sources Included in the GTCC LLW EIS Inventory

#	Type	Assay Date	Activity at time of Assay (Ci)	2007 Activity (Ci)	2019 Activity (Ci)
1	DOE	12/17/1993	5.98E+03	4.43E+03	3.36E+03
2	DOE	12/17/1993	4.70E+03	3.48E+03	2.64E+03
3	DOE	9/9/1996	3.00E+03	2.36E+03	1.79E+03
4	DOE	2/1/1962	2.20E+03	7.81E+02	5.92E+02
5	DOE	5/12/2004	6.58E+02	6.19E+02	4.70E+02
6	DOE	1/1/1986	1.00E+03	6.16E+02	4.67E+02
7	DOE	12/17/1993	2.89E+02	2.14E+02	1.62E+02
8	DOE	6/5/1989	2.50E+02	1.67E+02	1.26E+02
9	DOE	8/6/2002	1.00E+02	9.03E+01	6.85E+01
10	DOE	6/1/1967	2.12E+02	8.51E+01	6.46E+01
11	DOE	6/1/2004	4.17E+01	3.93E+01	2.98E+01
12	DOE	8/20/1996	5.00E+01	3.94E+01	2.99E+01
			Stored Subtotal	**1.29E+04**	**9.80E+03**
13	DOE	5/12/2004	5.53E+03	5.20E+03	3.95E+03
14	DOE	1/1/1994	7.00E+03	5.19E+03	3.93E+03
15	DOE	8/31/1965	1.20E+04	4.62E+03	3.51E+03
16	DOE	5/21/2004	3.11E+03	2.93E+03	2.22E+03
17	DOE	5/19/2004	2.30E+03	2.16E+03	1.64E+03
18	DOE	5/19/2004	2.30E+03	2.16E+03	1.64E+03
19	DOE	12/15/1983	2.00E+03	1.18E+03	8.91E+02
20	DOE	8/6/2002	1.25E+03	1.13E+03	8.56E+02
21	DOE	5/12/2004	9.98E+02	9.39E+02	7.12E+02
22	DOE	5/26/2004	7.06E+02	6.65E+02	5.04E+02
23	DOE	5/19/2004	5.14E+02	4.84E+02	3.67E+02
24	DOE	9/13/2000	4.00E+02	3.46E+02	2.62E+02
25	DOE	5/12/2004	3.59E+02	3.38E+02	2.56E+02
26	DOE	5/12/2004	3.59E+02	3.38E+02	2.56E+02
27	DOE	1/2/1993	4.50E+02	3.26E+02	2.47E+02
28	DOE	5/19/2004	3.15E+02	2.96E+02	2.25E+02
29	DOE	5/19/2004	3.04E+02	2.86E+02	2.17E+02
30	DOE	5/21/2004	2.72E+02	2.56E+02	1.94E+02
31	DOE	5/19/2004	2.51E+02	2.36E+02	1.79E+02
32	DOE	5/19/2004	2.51E+02	2.36E+02	1.79E+02
33	DOE	1/14/2002	2.25E+02	2.01E+02	1.52E+02

Table 4 Cs-137 Sources Included in the GTCC LLW EIS Inventory (Continued)

#	Type	Assay Date	Activity at time of Assay (Ci)	2007 Activity (Ci)	2019 Activity (Ci)
34	DOE	8/8/1984	2.60E+02	1.55E+02	1.18E+02
35	DOE	8/1/1975	3.00E+02	1.45E+02	1.10E+02
36	DOE	8/6/2002	1.00E+02	9.03E+01	6.85E+01
37	DOE	4/20/1990	1.30E+02	8.84E+01	6.71E+01
38	DOE	5/26/2004	9.08E+01	8.55E+01	6.48E+01
39	DOE	6/9/1987	9.23E+01	5.87E+01	4.45E+01
40	DOE	5/4/1983	7.91E+01	4.58E+01	3.48E+01
41	DOE	8/6/2002	5.00E+01	4.52E+01	3.43E+01
42	DOE	8/6/2002	5.00E+01	4.52E+01	3.43E+01
43	DOE	5/12/2004	4.37E+01	4.11E+01	3.12E+01
44	DOE	5/12/2004	4.28E+01	4.03E+01	3.05E+01
45	DOE	1/1/1964	1.00E+02	3.71E+01	2.81E+01
46	DOE	5/21/2004	3.62E+01	3.41E+01	2.58E+01
47	NRC	a	a	1.99E+05	1.51E+05
48	NRC	a	a	4.38E+04	3.32E+04
49	NRC	a	a	4.38E+04	3.32E+04
50	NRC	a	a	4.38E+04	3.32E+04
51	NRC	a	a	4.38E+04	3.32E+04
52	NRC	a	a	3.93E+04	2.98E+04
53	NRC	a	a	3.92E+04	2.97E+04
54	NRC	a	a	3.66E+04	2.78E+04
55	NRC	a	a	3.58E+04	2.71E+04
56	NRC	a	a	3.50E+04	2.65E+04
57	NRC	a	a	3.37E+04	2.56E+04
58	NRC	a	a	1.18E+04	8.95E+03
59	NRC	a	a	8.72E+03	6.61E+03
60	NRC	a	a	8.41E+03	6.38E+03
61	NRC	a	a	7.27E+03	5.51E+03
62	NRC	a	a	7.27E+03	5.51E+03
63	NRC	a	a	7.20E+03	5.46E+03
64	NRC	a	a	7.10E+03	5.38E+03
65	NRC	a	a	7.01E+03	5.32E+03
66	NRC	a	a	6.84E+03	5.19E+03
67	NRC	a	a	6.81E+03	5.16E+03
68	NRC	a	a	6.74E+03	5.11E+03
69	NRC	a	a	6.73E+03	5.10E+03
70	NRC	a	a	6.57E+03	4.98E+03
71	NRC	a	a	6.54E+03	4.96E+03

Table 4 Cs-137 Sources Included in the GTCC LLW EIS Inventory (Continued)

#	Type	Assay Date	Activity at time of Assay (Ci)	2007 Activity (Ci)	2019 Activity (Ci)
72	NRC	a	a	6.52E+03	4.94E+03
73	NRC	a	a	6.23E+03	4.72E+03
74	NRC	a	a	6.23E+03	4.72E+03
75	NRC	a	a	6.21E+03	4.71E+03
76	NRC	a	a	6.18E+03	4.69E+03
77	NRC	a	a	5.99E+03	4.54E+03
78	NRC	a	a	5.86E+03	4.44E+03
79	NRC	a	a	5.79E+03	4.39E+03
80	NRC	a	a	5.66E+03	4.29E+03
81	NRC	a	a	5.65E+03	4.28E+03
82	NRC	a	a	5.58E+03	4.23E+03
83	NRC	a	a	5.44E+03	4.13E+03
84	NRC	a	a	5.39E+03	4.09E+03
85	NRC	a	a	5.35E+03	4.06E+03
86	NRC	a	a	5.34E+03	4.05E+03
87	NRC	a	a	5.23E+03	3.97E+03
88	NRC	a	a	5.22E+03	3.96E+03
89	NRC	a	a	5.03E+03	3.81E+03
90	NRC	a	a	5.02E+03	3.81E+03
91	NRC	a	a	4.89E+03	3.71E+03
92	NRC	a	a	4.80E+03	3.64E+03
93	NRC	a	a	4.76E+03	3.61E+03
94	NRC	a	a	4.76E+03	3.61E+03
95	NRC	a	a	4.75E+03	3.60E+03
96	NRC	a	a	4.66E+03	3.53E+03
97	NRC	a	a	4.64E+03	3.52E+03
98	NRC	a	a	4.64E+03	3.52E+03
99	NRC	a	a	4.60E+03	3.49E+03
100	NRC	a	a	4.59E+03	3.48E+03
101	NRC	a	a	4.32E+03	3.28E+03
102	NRC	a	a	4.29E+03	3.25E+03
103	NRC	a	a	4.27E+03	3.24E+03
104	NRC	a	a	4.27E+03	3.24E+03
105	NRC	a	a	4.26E+03	3.23E+03
106	NRC	a	a	4.24E+03	3.22E+03
107	NRC	a	a	4.20E+03	3.19E+03
108	NRC	a	a	4.19E+03	3.18E+03
109	NRC	a	a	4.17E+03	3.16E+03
110	NRC	a	a	4.17E+03	3.16E+03

Table 4 Cs-137 Sources Included in the GTCC LLW EIS Inventory (Continued)

#	Type	Assay Date	Activity at time of Assay (Ci)	2007 Activity (Ci)	2019 Activity (Ci)
111	NRC	a	a	4.08E+03	3.09E+03
112	NRC	a	a	4.06E+03	3.08E+03
113	NRC	a	a	4.05E+03	3.07E+03
114	NRC	a	a	4.03E+03	3.06E+03
115	NRC	a	a	4.03E+03	3.06E+03
116	NRC	a	a	4.03E+03	3.06E+03
117	NRC	a	a	3.95E+03	3.00E+03
118	NRC	a	a	3.94E+03	2.99E+03
119	NRC	a	a	3.89E+03	2.95E+03
120	NRC	a	a	3.88E+03	2.94E+03
121	NRC	a	a	3.87E+03	2.93E+03
122	NRC	a	a	3.87E+03	2.93E+03
123	NRC	a	a	3.87E+03	2.93E+03
124	NRC	a	a	3.87E+03	2.93E+03
125	NRC	a	a	3.87E+03	2.93E+03
126	NRC	a	a	3.81E+03	2.89E+03
127	NRC	a	a	3.81E+03	2.89E+03
128	NRC	a	a	3.80E+03	2.88E+03
129	NRC	a	a	3.78E+03	2.87E+03
130	NRC	a	a	3.78E+03	2.87E+03
131	NRC	a	a	3.78E+03	2.87E+03
132	NRC	a	a	3.78E+03	2.87E+03
133	NRC	a	a	3.78E+03	2.87E+03
134	NRC	a	a	3.78E+03	2.87E+03
135	NRC	a	a	3.76E+03	2.85E+03
136	NRC	a	a	3.76E+03	2.85E+03
137	NRC	a	a	3.72E+03	2.82E+03
138	NRC	a	a	3.70E+03	2.81E+03
139	NRC	a	a	3.70E+03	2.81E+03
140	NRC	a	a	3.69E+03	2.80E+03
141	NRC	a	a	3.67E+03	2.78E+03
142	NRC	a	a	3.65E+03	2.77E+03
143	NRC	a	a	3.65E+03	2.77E+03
144	NRC	a	a	3.65E+03	2.77E+03
145	NRC	a	a	3.63E+03	2.75E+03
146	NRC	a	a	3.63E+03	2.75E+03
147	NRC	a	a	3.62E+03	2.75E+03
148	NRC	a	a	3.61E+03	2.74E+03
149	NRC	a	a	3.59E+03	2.72E+03

Table 4 Cs-137 Sources Included in the GTCC LLW EIS Inventory (Continued)

#	Type	Assay Date	Activity at time of Assay (Ci)	2007 Activity (Ci)	2019 Activity (Ci)
150	NRC	a	a	3.59E+03	2.72E+03
151	NRC	a	a	3.59E+03	2.72E+03
152	NRC	a	a	3.58E+03	2.71E+03
153	NRC	a	a	3.58E+03	2.71E+03
154	NRC	a	a	3.58E+03	2.71E+03
155	NRC	a	a	3.57E+03	2.71E+03
156	NRC	a	a	3.57E+03	2.71E+03
157	NRC	a	a	3.54E+03	2.68E+03
158	NRC	a	a	3.54E+03	2.68E+03
159	NRC	a	a	3.52E+03	2.67E+03
160	NRC	a	a	3.50E+03	2.65E+03
161	NRC	a	a	3.50E+03	2.65E+03
162	NRC	a	a	3.48E+03	2.64E+03
163	NRC	a	a	3.47E+03	2.63E+03
164	NRC	a	a	3.47E+03	2.63E+03
165	NRC	a	a	3.47E+03	2.63E+03
166	NRC	a	a	3.45E+03	2.62E+03
167	NRC	a	a	3.45E+03	2.62E+03
168	NRC	a	a	3.43E+03	2.60E+03
169	NRC	a	a	3.41E+03	2.59E+03
170	NRC	a	a	3.40E+03	2.58E+03
171	NRC	a	a	3.40E+03	2.58E+03
172	NRC	a	a	3.40E+03	2.58E+03
173	NRC	a	a	3.40E+03	2.58E+03
174	NRC	a	a	3.39E+03	2.57E+03
175	NRC	a	a	3.37E+03	2.56E+03
176	NRC	a	a	3.36E+03	2.55E+03
177	NRC	a	a	3.33E+03	2.53E+03
178	NRC	a	a	3.32E+03	2.52E+03
179	NRC	a	a	3.29E+03	2.49E+03
180	NRC	a	a	3.29E+03	2.49E+03
181	NRC	a	a	3.28E+03	2.49E+03
182	NRC	a	a	3.28E+03	2.49E+03
183	NRC	a	a	3.28E+03	2.49E+03
184	NRC	a	a	3.25E+03	2.46E+03
185	NRC	a	a	3.25E+03	2.46E+03
186	NRC	a	a	3.24E+03	2.46E+03
187	NRC	a	a	3.23E+03	2.45E+03
188	NRC	a	a	3.22E+03	2.44E+03

Table 4 Cs-137 Sources Included in the GTCC LLW EIS Inventory (Continued)

#	Type	Assay Date	Activity at time of Assay (Ci)	2007 Activity (Ci)	2019 Activity (Ci)
189	NRC	a	a	3.19E+03	2.42E+03
190	NRC	a	a	3.17E+03	2.40E+03
191	NRC	a	a	3.16E+03	2.40E+03
192	NRC	a	a	3.16E+03	2.40E+03
193	NRC	a	a	3.14E+03	2.38E+03
194	NRC	a	a	3.13E+03	2.37E+03
195	NRC	a	a	3.13E+03	2.37E+03
196	NRC	a	a	3.13E+03	2.37E+03
197	NRC	a	a	3.12E+03	2.37E+03
198	NRC	a	a	3.10E+03	2.35E+03
199	NRC	a	a	3.09E+03	2.34E+03
200	NRC	a	a	3.09E+03	2.34E+03
201	NRC	a	a	3.07E+03	2.33E+03
202	NRC	a	a	3.00E+03	2.28E+03
203	NRC	a	a	3.00E+03	2.28E+03
204	NRC	a	a	3.00E+03	2.28E+03
205	NRC	a	a	2.99E+03	2.27E+03
206	NRC	a	a	2.99E+03	2.27E+03
207	NRC	a	a	2.99E+03	2.27E+03
208	NRC	a	a	2.99E+03	2.27E+03
209	NRC	a	a	2.98E+03	2.26E+03
210	NRC	a	a	2.97E+03	2.25E+03
211	NRC	a	a	2.97E+03	2.25E+03
212	NRC	a	a	2.93E+03	2.22E+03
213	NRC	a	a	2.93E+03	2.22E+03
214	NRC	a	a	2.92E+03	2.21E+03
215	NRC	a	a	2.91E+03	2.21E+03
216	NRC	a	a	2.90E+03	2.20E+03
217	NRC	a	a	2.90E+03	2.20E+03
218	NRC	a	a	2.90E+03	2.20E+03
219	NRC	a	a	2.90E+03	2.20E+03
220	NRC	a	a	2.89E+03	2.19E+03
221	NRC	a	a	2.88E+03	2.18E+03
222	NRC	a	a	2.87E+03	2.18E+03
223	NRC	a	a	2.86E+03	2.17E+03
224	NRC	a	a	2.84E+03	2.15E+03
225	NRC	a	a	2.84E+03	2.15E+03
226	NRC	a	a	2.84E+03	2.15E+03
227	NRC	a	a	2.83E+03	2.15E+03

Table 4 Cs-137 Sources Included in the GTCC LLW EIS Inventory (Continued)

#	Type	Assay Date	Activity at time of Assay (Ci)	2007 Activity (Ci)	2019 Activity (Ci)
228	NRC	a	a	2.81E+03	2.13E+03
229	NRC	a	a	2.81E+03	2.13E+03
230	NRC	a	a	2.79E+03	2.12E+03
231	NRC	a	a	2.79E+03	2.12E+03
232	NRC	a	a	2.78E+03	2.11E+03
233	NRC	a	a	2.77E+03	2.10E+03
234	NRC	a	a	2.76E+03	2.09E+03
235	NRC	a	a	2.76E+03	2.09E+03
236	NRC	a	a	2.75E+03	2.09E+03
237	NRC	a	a	2.69E+03	2.04E+03
238	NRC	a	a	2.68E+03	2.03E+03
239	NRC	a	a	2.68E+03	2.03E+03
240	NRC	a	a	2.68E+03	2.03E+03
241	NRC	a	a	2.68E+03	2.03E+03
242	NRC	a	a	2.67E+03	2.02E+03
243	NRC	a	a	2.66E+03	2.02E+03
244	NRC	a	a	2.66E+03	2.02E+03
245	NRC	a	a	2.65E+03	2.01E+03
246	NRC	a	a	2.65E+03	2.01E+03
247	NRC	a	a	2.62E+03	1.99E+03
248	NRC	a	a	2.61E+03	1.98E+03
249	NRC	a	a	2.61E+03	1.98E+03
250	NRC	a	a	2.61E+03	1.98E+03
251	NRC	a	a	2.60E+03	1.97E+03
252	NRC	a	a	2.60E+03	1.97E+03
253	NRC	a	a	2.60E+03	1.97E+03
254	NRC	a	a	2.58E+03	1.96E+03
255	NRC	a	a	2.57E+03	1.95E+03
256	NRC	a	a	2.56E+03	1.94E+03
257	NRC	a	a	2.56E+03	1.94E+03
258	NRC	a	a	2.55E+03	1.93E+03
259	NRC	a	a	2.52E+03	1.91E+03
260	NRC	a	a	2.52E+03	1.91E+03
261	NRC	a	a	2.51E+03	1.90E+03
262	NRC	a	a	2.51E+03	1.90E+03
263	NRC	a	a	2.50E+03	1.90E+03
264	NRC	a	a	2.50E+03	1.90E+03
265	NRC	a	a	2.49E+03	1.89E+03
266	NRC	a	a	2.46E+03	1.87E+03

Table 4 Cs-137 Sources Included in the GTCC LLW EIS Inventory (Continued)

#	Type	Assay Date	Activity at time of Assay (Ci)	2007 Activity (Ci)	2019 Activity (Ci)
267	NRC	a	a	2.46E+03	1.87E+03
268	NRC	a	a	2.44E+03	1.85E+03
269	NRC	a	a	2.43E+03	1.84E+03
270	NRC	a	a	2.38E+03	1.80E+03
271	NRC	a	a	2.35E+03	1.78E+03
272	NRC	a	a	2.34E+03	1.77E+03
273	NRC	a	a	2.32E+03	1.76E+03
274	NRC	a	a	2.32E+03	1.76E+03
275	NRC	a	a	2.32E+03	1.76E+03
276	NRC	a	a	2.32E+03	1.76E+03
277	NRC	a	a	2.29E+03	1.74E+03
278	NRC	a	a	2.28E+03	1.73E+03
279	NRC	a	a	2.27E+03	1.72E+03
280	NRC	a	a	2.27E+03	1.72E+03
281	NRC	a	a	2.25E+03	1.71E+03
282	NRC	a	a	2.25E+03	1.71E+03
283	NRC	a	a	2.23E+03	1.69E+03
284	NRC	a	a	2.22E+03	1.68E+03
285	NRC	a	a	2.22E+03	1.68E+03
286	NRC	a	a	2.21E+03	1.68E+03
287	NRC	a	a	2.18E+03	1.65E+03
288	NRC	a	a	2.17E+03	1.65E+03
289	NRC	a	a	2.17E+03	1.65E+03
290	NRC	a	a	2.17E+03	1.65E+03
291	NRC	a	a	2.16E+03	1.64E+03
292	NRC	a	a	2.15E+03	1.63E+03
293	NRC	a	a	2.15E+03	1.63E+03
294	NRC	a	a	2.15E+03	1.63E+03
295	NRC	a	a	2.15E+03	1.63E+03
296	NRC	a	a	2.15E+03	1.63E+03
297	NRC	a	a	2.14E+03	1.62E+03
298	NRC	a	a	2.13E+03	1.62E+03
299	NRC	a	a	2.13E+03	1.62E+03
300	NRC	a	a	2.13E+03	1.62E+03
301	NRC	a	a	2.13E+03	1.62E+03
302	NRC	a	a	2.09E+03	1.58E+03
303	NRC	a	a	2.07E+03	1.57E+03
304	NRC	a	a	2.07E+03	1.57E+03
305	NRC	a	a	2.06E+03	1.56E+03

Table 4 Cs-137 Sources Included in the GTCC LLW EIS Inventory (Continued)

#	Type	Assay Date	Activity at time of Assay (Ci)	2007 Activity (Ci)	2019 Activity (Ci)
306	NRC	a	a	2.05E+03	1.55E+03
307	NRC	a	a	2.04E+03	1.55E+03
308	NRC	a	a	2.00E+03	1.52E+03
309	NRC	a	a	1.99E+03	1.51E+03
310	NRC	a	a	1.99E+03	1.51E+03
311	NRC	a	a	1.99E+03	1.51E+03
312	NRC	a	a	1.99E+03	1.51E+03
313	NRC	a	a	1.99E+03	1.51E+03
314	NRC	a	a	1.98E+03	1.50E+03
315	NRC	a	a	1.98E+03	1.50E+03
316	NRC	a	a	1.98E+03	1.50E+03
317	NRC	a	a	1.96E+03	1.49E+03
318	NRC	a	a	1.93E+03	1.46E+03
319	NRC	a	a	1.93E+03	1.46E+03
320	NRC	a	a	1.92E+03	1.46E+03
321	NRC	a	a	1.92E+03	1.46E+03
322	NRC	a	a	1.92E+03	1.46E+03
323	NRC	a	a	1.92E+03	1.46E+03
324	NRC	a	a	1.90E+03	1.44E+03
325	NRC	a	a	1.87E+03	1.42E+03
326	NRC	a	a	1.85E+03	1.40E+03
327	NRC	a	a	1.85E+03	1.40E+03
328	NRC	a	a	1.81E+03	1.37E+03
329	NRC	a	a	1.80E+03	1.37E+03
330	NRC	a	a	1.80E+03	1.37E+03
331	NRC	a	a	1.79E+03	1.36E+03
332	NRC	a	a	1.79E+03	1.36E+03
333	NRC	a	a	1.79E+03	1.36E+03
334	NRC	a	a	1.79E+03	1.36E+03
335	NRC	a	a	1.79E+03	1.36E+03
336	NRC	a	a	1.79E+03	1.36E+03
337	NRC	a	a	1.78E+03	1.35E+03
338	NRC	a	a	1.78E+03	1.35E+03
339	NRC	a	a	1.78E+03	1.35E+03
340	NRC	a	a	1.78E+03	1.35E+03
341	NRC	a	a	1.78E+03	1.35E+03
342	NRC	a	a	1.77E+03	1.34E+03
343	NRC	a	a	1.76E+03	1.33E+03
344	NRC	a	a	1.74E+03	1.32E+03

Table 4 Cs-137 Sources Included in the GTCC LLW EIS Inventory (Continued)

#	Type	Assay Date	Activity at time of Assay (Ci)	2007 Activity (Ci)	2019 Activity (Ci)
345	NRC	a	a	1.74E+03	1.32E+03
346	NRC	a	a	1.74E+03	1.32E+03
347	NRC	a	a	1.72E+03	1.30E+03
348	NRC	a	a	1.72E+03	1.30E+03
349	NRC	a	a	1.72E+03	1.30E+03
350	NRC	a	a	1.72E+03	1.30E+03
351	NRC	a	a	1.71E+03	1.30E+03
352	NRC	a	a	1.71E+03	1.30E+03
353	NRC	a	a	1.71E+03	1.30E+03
354	NRC	a	a	1.71E+03	1.30E+03
355	NRC	a	a	1.71E+03	1.30E+03
356	NRC	a	a	1.71E+03	1.30E+03
357	NRC	a	a	1.70E+03	1.29E+03
358	NRC	a	a	1.69E+03	1.28E+03
359	NRC	a	a	1.68E+03	1.27E+03
360	NRC	a	a	1.68E+03	1.27E+03
361	NRC	a	a	1.67E+03	1.27E+03
362	NRC	a	a	1.67E+03	1.27E+03
363	NRC	a	a	1.67E+03	1.27E+03
364	NRC	a	a	1.67E+03	1.27E+03
365	NRC	a	a	1.67E+03	1.27E+03
366	NRC	a	a	1.67E+03	1.27E+03
367	NRC	a	a	1.66E+03	1.26E+03
368	NRC	a	a	1.66E+03	1.26E+03
369	NRC	a	a	1.66E+03	1.26E+03
370	NRC	a	a	1.66E+03	1.26E+03
371	NRC	a	a	1.66E+03	1.26E+03
372	NRC	a	a	1.66E+03	1.26E+03
373	NRC	a	a	1.66E+03	1.26E+03
374	NRC	a	a	1.65E+03	1.25E+03
375	NRC	a	a	1.65E+03	1.25E+03
376	NRC	a	a	1.64E+03	1.24E+03
377	NRC	a	a	1.64E+03	1.24E+03
378	NRC	a	a	1.63E+03	1.24E+03
379	NRC	a	a	1.62E+03	1.23E+03
380	NRC	a	a	1.62E+03	1.23E+03
381	NRC	a	a	1.62E+03	1.23E+03
382	NRC	a	a	1.62E+03	1.23E+03
383	NRC	a	a	1.62E+03	1.23E+03

Table 4 Cs-137 Sources Included in the GTCC LLW EIS Inventory (Continued)

#	Type	Assay Date	Activity at time of Assay (Ci)	2007 Activity (Ci)	2019 Activity (Ci)
384	NRC	a	a	1.62E+03	1.23E+03
385	NRC	a	a	1.62E+03	1.23E+03
386	NRC	a	a	1.61E+03	1.22E+03
387	NRC	a	a	1.61E+03	1.22E+03
388	NRC	a	a	1.61E+03	1.22E+03
389	NRC	a	a	1.60E+03	1.21E+03
390	NRC	a	a	1.60E+03	1.21E+03
391	NRC	a	a	1.60E+03	1.21E+03
392	NRC	a	a	1.60E+03	1.21E+03
393	NRC	a	a	1.59E+03	1.21E+03
394	NRC	a	a	1.59E+03	1.21E+03
395	NRC	a	a	1.59E+03	1.21E+03
396	NRC	a	a	1.59E+03	1.21E+03
397	NRC	a	a	1.59E+03	1.21E+03
398	NRC	a	a	1.59E+03	1.21E+03
399	NRC	a	a	1.59E+03	1.21E+03
400	NRC	a	a	1.58E+03	1.20E+03
401	NRC	a	a	1.58E+03	1.20E+03
402	NRC	a	a	1.58E+03	1.20E+03
403	NRC	a	a	1.57E+03	1.19E+03
404	NRC	a	a	1.56E+03	1.18E+03
405	NRC	a	a	1.56E+03	1.18E+03
406	NRC	a	a	1.56E+03	1.18E+03
407	NRC	a	a	1.56E+03	1.18E+03
408	NRC	a	a	1.56E+03	1.18E+03
409	NRC	a	a	1.56E+03	1.18E+03
410	NRC	a	a	1.55E+03	1.18E+03
411	NRC	a	a	1.54E+03	1.17E+03
412	NRC	a	a	1.54E+03	1.17E+03
413	NRC	a	a	1.54E+03	1.17E+03
414	NRC	a	a	1.54E+03	1.17E+03
415	NRC	a	a	1.54E+03	1.17E+03
416	NRC	a	a	1.53E+03	1.16E+03
417	NRC	a	a	1.53E+03	1.16E+03
418	NRC	a	a	1.53E+03	1.16E+03
419	NRC	a	a	1.53E+03	1.16E+03
420	NRC	a	a	1.53E+03	1.16E+03
421	NRC	a	a	1.52E+03	1.15E+03
422	NRC	a	a	1.51E+03	1.15E+03

Table 4 Cs-137 Sources Included in the GTCC LLW EIS Inventory (Continued)

#	Type	Assay Date	Activity at time of Assay (Ci)	2007 Activity (Ci)	2019 Activity (Ci)
423	NRC	a	a	1.51E+03	1.15E+03
424	NRC	a	a	1.51E+03	1.15E+03
425	NRC	a	a	1.50E+03	1.14E+03
426	NRC	a	a	1.50E+03	1.14E+03
427	NRC	a	a	1.48E+03	1.12E+03
428	NRC	a	a	1.48E+03	1.12E+03
429	NRC	a	a	1.48E+03	1.12E+03
430	NRC	a	a	1.48E+03	1.12E+03
431	NRC	a	a	1.46E+03	1.11E+03
432	NRC	a	a	1.46E+03	1.11E+03
433	NRC	a	a	1.46E+03	1.11E+03
434	NRC	a	a	1.46E+03	1.11E+03
435	NRC	a	a	1.46E+03	1.11E+03
436	NRC	a	a	1.46E+03	1.11E+03
437	NRC	a	a	1.46E+03	1.11E+03
438	NRC	a	a	1.46E+03	1.11E+03
439	NRC	a	a	1.45E+03	1.10E+03
440	NRC	a	a	1.45E+03	1.10E+03
441	NRC	a	a	1.45E+03	1.10E+03
442	NRC	a	a	1.45E+03	1.10E+03
443	NRC	a	a	1.45E+03	1.10E+03
444	NRC	a	a	1.44E+03	1.09E+03
445	NRC	a	a	1.44E+03	1.09E+03
446	NRC	a	a	1.44E+03	1.09E+03
447	NRC	a	a	1.44E+03	1.09E+03
448	NRC	a	a	1.43E+03	1.08E+03
449	NRC	a	a	1.43E+03	1.08E+03
450	NRC	a	a	1.43E+03	1.08E+03
451	NRC	a	a	1.43E+03	1.08E+03
452	NRC	a	a	1.43E+03	1.08E+03
453	NRC	a	a	1.43E+03	1.08E+03
454	NRC	a	a	1.42E+03	1.08E+03
455	NRC	a	a	1.42E+03	1.08E+03
456	NRC	a	a	1.42E+03	1.08E+03
457	NRC	a	a	1.42E+03	1.08E+03
458	NRC	a	a	1.42E+03	1.08E+03
459	NRC	a	a	1.42E+03	1.08E+03
460	NRC	a	a	1.42E+03	1.08E+03
461	NRC	a	a	1.41E+03	1.07E+03

Table 4 Cs-137 Sources Included in the GTCC LLW EIS Inventory (Continued)

#	Type	Assay Date	Activity at time of Assay (Ci)	2007 Activity (Ci)	2019 Activity (Ci)
462	NRC	a	a	1.41E+03	1.07E+03
463	NRC	a	a	1.41E+03	1.07E+03
464	NRC	a	a	1.41E+03	1.07E+03
465	NRC	a	a	1.40E+03	1.06E+03
466	NRC	a	a	1.40E+03	1.06E+03
467	NRC	a	a	1.39E+03	1.05E+03
468	NRC	a	a	1.38E+03	1.05E+03
469	NRC	a	a	1.38E+03	1.05E+03
470	NRC	a	a	1.38E+03	1.05E+03
471	NRC	a	a	1.38E+03	1.05E+03
472	NRC	a	a	1.38E+03	1.05E+03
473	NRC	a	a	1.38E+03	1.05E+03
474	NRC	a	a	1.38E+03	1.05E+03
475	NRC	a	a	1.38E+03	1.05E+03
476	NRC	a	a	1.38E+03	1.05E+03
477	NRC	a	a	1.37E+03	1.04E+03
478	NRC	a	a	1.37E+03	1.04E+03
479	NRC	a	a	1.36E+03	1.03E+03
480	NRC	a	a	1.36E+03	1.03E+03
481	NRC	a	a	1.36E+03	1.03E+03
482	NRC	a	a	1.35E+03	1.02E+03
483	NRC	a	a	1.35E+03	1.02E+03
484	NRC	a	a	1.35E+03	1.02E+03
485	NRC	a	a	1.34E+03	1.02E+03
486	NRC	a	a	1.34E+03	1.02E+03
487	NRC	a	a	1.34E+03	1.02E+03
488	NRC	a	a	1.34E+03	1.02E+03
489	NRC	a	a	1.34E+03	1.02E+03
490	NRC	a	a	1.34E+03	1.02E+03
491	NRC	a	a	1.33E+03	1.01E+03
492	NRC	a	a	1.33E+03	1.01E+03
493	NRC	a	a	1.32E+03	1.00E+03
494	NRC	a	a	1.32E+03	1.00E+03
495	NRC	a	a	1.32E+03	1.00E+03
496	NRC	a	a	1.32E+03	1.00E+03
497	NRC	a	a	1.32E+03	1.00E+03
498	NRC	a	a	1.32E+03	1.00E+03
499	NRC	a	a	1.32E+03	1.00E+03
500	NRC	a	a	1.31E+03	9.93E+02

Table 4 Cs-137 Sources Included in the GTCC LLW EIS Inventory (Continued)

#	Type	Assay Date	Activity at time of Assay (Ci)	2007 Activity (Ci)	2019 Activity (Ci)
501	NRC	a	a	1.31E+03	9.93E+02
502	NRC	a	a	1.31E+03	9.93E+02
503	NRC	a	a	1.31E+03	9.93E+02
504	NRC	a	a	1.31E+03	9.93E+02
505	NRC	a	a	1.31E+03	9.93E+02
506	NRC	a	a	1.30E+03	9.86E+02
507	NRC	a	a	1.29E+03	9.78E+02
508	NRC	a	a	1.28E+03	9.71E+02
509	NRC	a	a	1.28E+03	9.71E+02
510	NRC	a	a	1.28E+03	9.71E+02
511	NRC	a	a	1.28E+03	9.71E+02
512	NRC	a	a	1.28E+03	9.71E+02
513	NRC	a	a	1.27E+03	9.63E+02
514	NRC	a	a	1.27E+03	9.63E+02
515	NRC	a	a	1.27E+03	9.63E+02
516	NRC	a	a	1.26E+03	9.56E+02
517	NRC	a	a	1.26E+03	9.56E+02
518	NRC	a	a	1.26E+03	9.56E+02
519	NRC	a	a	1.26E+03	9.56E+02
520	NRC	a	a	1.26E+03	9.56E+02
521	NRC	a	a	1.26E+03	9.56E+02
522	NRC	a	a	1.26E+03	9.56E+02
523	NRC	a	a	1.26E+03	9.56E+02
524	NRC	a	a	1.25E+03	9.48E+02
525	NRC	a	a	1.25E+03	9.48E+02
526	NRC	a	a	1.25E+03	9.48E+02
527	NRC	a	a	1.25E+03	9.48E+02
528	NRC	a	a	1.25E+03	9.48E+02
529	NRC	a	a	1.25E+03	9.48E+02
530	NRC	a	a	1.25E+03	9.48E+02
531	NRC	a	a	1.25E+03	9.48E+02
532	NRC	a	a	1.25E+03	9.48E+02
533	NRC	a	a	1.25E+03	9.48E+02
534	NRC	a	a	1.25E+03	9.48E+02
535	NRC	a	a	1.25E+03	9.48E+02
536	NRC	a	a	1.25E+03	9.48E+02
537	NRC	a	a	1.25E+03	9.48E+02
538	NRC	a	a	1.25E+03	9.48E+02
539	NRC	a	a	1.25E+03	9.48E+02

Table 4 Cs-137 Sources Included in the GTCC LLW EIS Inventory (Continued)

#	Type	Assay Date	Activity at time of Assay (Ci)	2007 Activity (Ci)	2019 Activity (Ci)
540	NRC	a	a	1.25E+03	9.48E+02
541	NRC	a	a	1.24E+03	9.40E+02
542	NRC	a	a	1.24E+03	9.40E+02
543	NRC	a	a	1.24E+03	9.40E+02
544	NRC	a	a	1.24E+03	9.40E+02
545	NRC	a	a	1.24E+03	9.40E+02
546	NRC	a	a	1.24E+03	9.40E+02
547	NRC	a	a	1.24E+03	9.40E+02
548	NRC	a	a	1.24E+03	9.40E+02
549	NRC	a	a	1.23E+03	9.33E+02
550	NRC	a	a	1.23E+03	9.33E+02
551	NRC	a	a	1.23E+03	9.33E+02
552	NRC	a	a	1.23E+03	9.33E+02
553	NRC	a	a	1.23E+03	9.33E+02
554	NRC	a	a	1.23E+03	9.33E+02
555	NRC	a	a	1.23E+03	9.33E+02
556	NRC	a	a	1.23E+03	9.33E+02
557	NRC	a	a	1.23E+03	9.33E+02
558	NRC	a	a	1.23E+03	9.33E+02
559	NRC	a	a	1.23E+03	9.33E+02
560	NRC	a	a	1.22E+03	9.25E+02
561	NRC	a	a	1.22E+03	9.25E+02
562	NRC	a	a	1.22E+03	9.25E+02
563	NRC	a	a	1.21E+03	9.18E+02
564	NRC	a	a	1.21E+03	9.18E+02
565	NRC	a	a	1.21E+03	9.18E+02
566	NRC	a	a	1.21E+03	9.18E+02
567	NRC	a	a	1.21E+03	9.18E+02
568	NRC	a	a	1.21E+03	9.18E+02
569	NRC	a	a	1.21E+03	9.18E+02
570	NRC	a	a	1.21E+03	9.18E+02
571	NRC	a	a	1.21E+03	9.18E+02
572	NRC	a	a	1.21E+03	9.18E+02
573	NRC	a	a	1.20E+03	9.10E+02
574	NRC	a	a	1.20E+03	9.10E+02
575	NRC	a	a	1.20E+03	9.10E+02
576	NRC	a	a	1.20E+03	9.10E+02
577	NRC	a	a	1.20E+03	9.10E+02
578	NRC	a	a	1.20E+03	9.10E+02

Table 4 Cs-137 Sources Included in the GTCC LLW EIS Inventory (Continued)

#	Type	Assay Date	Activity at time of Assay (Ci)	2007 Activity (Ci)	2019 Activity (Ci)
579	NRC	a	a	1.20E+03	9.10E+02
580	NRC	a	a	1.20E+03	9.10E+02
581	NRC	a	a	1.20E+03	9.10E+02
582	NRC	a	a	1.20E+03	9.10E+02
583	NRC	a	a	1.20E+03	9.10E+02
584	NRC	a	a	1.20E+03	9.10E+02
585	NRC	a	a	1.20E+03	9.10E+02
586	NRC	a	a	1.20E+03	9.10E+02
587	NRC	a	a	1.20E+03	9.10E+02
588	NRC	a	a	1.20E+03	9.10E+02
589	NRC	a	a	1.20E+03	9.10E+02
590	NRC	a	a	1.20E+03	9.10E+02
591	NRC	a	a	1.20E+03	9.10E+02
592	NRC	a	a	1.20E+03	9.10E+02
593	NRC	a	a	1.20E+03	9.10E+02
594	NRC	a	a	1.20E+03	9.10E+02
595	NRC	a	a	1.20E+03	9.10E+02
596	NRC	a	a	1.19E+03	9.02E+02
597	NRC	a	a	1.19E+03	9.02E+02
598	NRC	a	a	1.19E+03	9.02E+02
599	NRC	a	a	1.19E+03	9.02E+02
600	NRC	a	a	1.19E+03	9.02E+02
601	NRC	a	a	1.19E+03	9.02E+02
602	NRC	a	a	1.19E+03	9.02E+02
603	NRC	a	a	1.19E+03	9.02E+02
604	NRC	a	a	1.19E+03	9.02E+02
605	NRC	a	a	1.19E+03	9.02E+02
606	NRC	a	a	1.19E+03	9.02E+02
607	NRC	a	a	1.19E+03	9.02E+02
608	NRC	a	a	1.19E+03	9.02E+02
609	NRC	a	a	1.19E+03	9.02E+02
610	NRC	a	a	1.19E+03	9.02E+02
611	NRC	a	a	1.18E+03	8.95E+02
612	NRC	a	a	1.18E+03	8.95E+02
613	NRC	a	a	1.18E+03	8.95E+02
614	NRC	a	a	1.18E+03	8.95E+02
615	NRC	a	a	1.18E+03	8.95E+02
616	NRC	a	a	1.18E+03	8.95E+02
617	NRC	a	a	1.18E+03	8.95E+02

Table 4 Cs-137 Sources Included in the GTCC LLW EIS Inventory (Continued)

#	Type	Assay Date	Activity at time of Assay (Ci)	2007 Activity (Ci)	2019 Activity (Ci)
618	NRC	a	a	1.18E+03	8.95E+02
619	NRC	a	a	1.18E+03	8.95E+02
620	NRC	a	a	1.18E+03	8.95E+02
621	NRC	a	a	1.18E+03	8.95E+02
622	NRC	a	a	1.18E+03	8.95E+02
623	NRC	a	a	1.18E+03	8.95E+02
624	NRC	a	a	1.18E+03	8.95E+02
625	NRC	a	a	1.18E+03	8.95E+02
626	NRC	a	a	1.18E+03	8.95E+02
627	NRC	a	a	1.18E+03	8.95E+02
628	NRC	a	a	1.17E+03	8.87E+02
629	NRC	a	a	1.17E+03	8.87E+02
630	NRC	a	a	1.17E+03	8.87E+02
631	NRC	a	a	1.17E+03	8.87E+02
632	NRC	a	a	1.17E+03	8.87E+02
633	NRC	a	a	1.17E+03	8.87E+02
634	NRC	a	a	1.17E+03	8.87E+02
635	NRC	a	a	1.17E+03	8.87E+02
636	NRC	a	a	1.17E+03	8.87E+02
637	NRC	a	a	1.17E+03	8.87E+02
638	NRC	a	a	1.17E+03	8.87E+02
639	NRC	a	a	1.17E+03	8.87E+02
640	NRC	a	a	1.17E+03	8.87E+02
641	NRC	a	a	1.16E+03	8.80E+02
642	NRC	a	a	1.16E+03	8.80E+02
643	NRC	a	a	1.16E+03	8.80E+02
644	NRC	a	a	1.16E+03	8.80E+02
645	NRC	a	a	1.16E+03	8.80E+02
646	NRC	a	a	1.16E+03	8.80E+02
647	NRC	a	a	1.16E+03	8.80E+02
648	NRC	a	a	1.15E+03	8.72E+02
649	NRC	a	a	1.15E+03	8.72E+02
650	NRC	a	a	1.15E+03	8.72E+02
651	NRC	a	a	1.15E+03	8.72E+02
652	NRC	a	a	1.15E+03	8.72E+02
653	NRC	a	a	1.15E+03	8.72E+02
654	NRC	a	a	1.15E+03	8.72E+02
655	NRC	a	a	1.14E+03	8.65E+02
656	NRC	a	a	1.14E+03	8.65E+02

Table 4 Cs-137 Sources Included in the GTCC LLW EIS Inventory (Continued)

#	Type	Assay Date	Activity at time of Assay (Ci)	2007 Activity (Ci)	2019 Activity (Ci)
657	NRC	a	a	1.14E+03	8.65E+02
658	NRC	a	a	1.13E+03	8.57E+02
659	NRC	a	a	1.12E+03	8.49E+02
660	NRC	a	a	1.12E+03	8.49E+02
661	NRC	a	a	1.12E+03	8.49E+02
662	NRC	a	a	1.12E+03	8.49E+02
663	NRC	a	a	1.12E+03	8.49E+02
664	NRC	a	a	1.12E+03	8.49E+02
665	NRC	a	a	1.11E+03	8.42E+02
666	NRC	a	a	1.11E+03	8.42E+02
667	NRC	a	a	1.11E+03	8.42E+02
668	NRC	a	a	1.11E+03	8.42E+02
669	NRC	a	a	1.11E+03	8.42E+02
670	NRC	a	a	1.11E+03	8.42E+02
671	NRC	a	a	1.10E+03	8.34E+02
672	NRC	a	a	1.10E+03	8.34E+02
673	NRC	a	a	1.10E+03	8.34E+02
674	NRC	a	a	1.10E+03	8.34E+02
675	NRC	a	a	1.10E+03	8.34E+02
676	NRC	a	a	1.10E+03	8.34E+02
677	NRC	a	a	1.10E+03	8.34E+02
678	NRC	a	a	1.09E+03	8.27E+02
679	NRC	a	a	1.09E+03	8.27E+02
680	NRC	a	a	1.09E+03	8.27E+02
681	NRC	a	a	1.09E+03	8.27E+02
682	NRC	a	a	1.09E+03	8.27E+02
683	NRC	a	a	1.09E+03	8.27E+02
684	NRC	a	a	1.09E+03	8.27E+02
685	NRC	a	a	1.08E+03	8.19E+02
686	NRC	a	a	1.07E+03	8.11E+02
687	NRC	a	a	1.07E+03	8.11E+02
688	NRC	a	a	1.07E+03	8.11E+02
689	NRC	a	a	1.07E+03	8.11E+02
690	NRC	a	a	1.07E+03	8.11E+02
691	NRC	a	a	1.07E+03	8.11E+02
692	NRC	a	a	1.06E+03	8.04E+02
693	NRC	a	a	1.06E+03	8.04E+02
694	NRC	a	a	1.06E+03	8.04E+02
695	NRC	a	a	1.06E+03	8.04E+02

Table 4 Cs-137 Sources Included in the GTCC LLW EIS Inventory (Continued)

#	Type	Assay Date	Activity at time of Assay (Ci)	2007 Activity (Ci)	2019 Activity (Ci)
696	NRC	a	a	1.06E+03	8.04E+02
697	NRC	a	a	1.06E+03	8.04E+02
698	NRC	a	a	1.06E+03	8.04E+02
699	NRC	a	a	1.06E+03	8.04E+02
700	NRC	a	a	1.05E+03	7.96E+02
701	NRC	a	a	1.05E+03	7.96E+02
702	NRC	a	a	1.05E+03	7.96E+02
703	NRC	a	a	1.04E+03	7.89E+02
704	NRC	a	a	1.04E+03	7.89E+02
705	NRC	a	a	1.04E+03	7.89E+02
706	NRC	a	a	1.04E+03	7.89E+02
707	NRC	a	a	1.04E+03	7.89E+02
708	NRC	a	a	1.04E+03	7.89E+02
709	NRC	a	a	1.04E+03	7.89E+02
710	NRC	a	a	1.03E+03	7.81E+02
711	NRC	a	a	1.03E+03	7.81E+02
712	NRC	a	a	1.03E+03	7.81E+02
713	NRC	a	a	1.03E+03	7.81E+02
714	NRC	a	a	1.03E+03	7.81E+02
715	NRC	a	a	1.03E+03	7.81E+02
716	NRC	a	a	1.03E+03	7.81E+02
717	NRC	a	a	1.03E+03	7.81E+02
718	NRC	a	a	1.03E+03	7.81E+02
719	NRC	a	a	1.03E+03	7.81E+02
720	NRC	a	a	1.03E+03	7.81E+02
721	NRC	a	a	1.03E+03	7.81E+02
722	NRC	a	a	1.02E+03	7.74E+02
723	NRC	a	a	1.02E+03	7.74E+02
724	NRC	a	a	1.02E+03	7.74E+02
725	NRC	a	a	1.02E+03	7.74E+02
726	NRC	a	a	1.02E+03	7.74E+02
727	NRC	a	a	1.01E+03	7.66E+02
728	NRC	a	a	1.01E+03	7.66E+02
729	NRC	a	a	1.01E+03	7.66E+02
730	NRC	a	a	1.01E+03	7.66E+02
731	NRC	a	a	1.01E+03	7.66E+02
732	NRC	a	a	1.01E+03	7.66E+02
733	NRC	a	a	1.01E+03	7.66E+02
734	NRC	a	a	1.00E+03	7.58E+02

Table 4 Cs-137 Sources Included in the GTCC LLW EIS Inventory (Continued)

#	Type	Assay Date	Activity at time of Assay (Ci)	2007 Activity (Ci)	2019 Activity (Ci)
735	NRC	a	a	1.00E+03	7.58E+02
736	NRC	a	a	9.99E+02	7.58E+02
737	NRC	a	a	9.99E+02	7.58E+02
738	NRC	a	a	9.99E+02	7.58E+02
739	NRC	a	a	9.99E+02	7.58E+02
740	NRC	a	a	9.98E+02	7.57E+02
741	NRC	a	a	9.96E+02	7.55E+02
742	NRC	a	a	9.96E+02	7.55E+02
743	NRC	a	a	9.95E+02	7.55E+02
744	NRC	a	a	9.95E+02	7.55E+02
745	NRC	a	a	9.92E+02	7.52E+02
746	NRC	a	a	9.92E+02	7.52E+02
747	NRC	a	a	9.92E+02	7.52E+02
748	NRC	a	a	9.89E+02	7.50E+02
749	NRC	a	a	9.89E+02	7.50E+02
750	NRC	a	a	9.87E+02	7.48E+02
751	NRC	a	a	9.87E+02	7.48E+02
752	NRC	a	a	9.86E+02	7.48E+02
753	NRC	a	a	9.86E+02	7.48E+02
754	NRC	a	a	9.85E+02	7.47E+02
755	NRC	a	a	9.85E+02	7.47E+02
756	NRC	a	a	9.81E+02	7.44E+02
757	NRC	a	a	9.78E+02	7.42E+02
758	NRC	a	a	9.78E+02	7.42E+02
759	NRC	a	a	9.70E+02	7.36E+02
760	NRC	a	a	9.70E+02	7.36E+02
761	NRC	a	a	9.69E+02	7.35E+02
762	NRC	a	a	9.69E+02	7.35E+02
763	NRC	a	a	9.68E+02	7.34E+02
764	NRC	a	a	9.67E+02	7.33E+02
765	NRC	a	a	9.66E+02	7.33E+02
766	NRC	a	a	9.63E+02	7.30E+02
767	NRC	a	a	9.62E+02	7.30E+02
768	NRC	a	a	9.62E+02	7.30E+02
769	NRC	a	a	9.61E+02	7.29E+02
770	NRC	a	a	9.61E+02	7.29E+02
771	NRC	a	a	9.58E+02	7.26E+02
772	NRC	a	a	9.58E+02	7.26E+02
773	NRC	a	a	9.56E+02	7.25E+02

Table 4 Cs-137 Sources Included in the GTCC LLW EIS Inventory (Continued)

#	Type	Assay Date	Activity at time of Assay (Ci)	2007 Activity (Ci)	2019 Activity (Ci)
774	NRC	a	a	9.56E+02	7.25E+02
775	NRC	a	a	9.55E+02	7.24E+02
776	NRC	a	a	9.55E+02	7.24E+02
777	NRC	a	a	9.52E+02	7.22E+02
778	NRC	a	a	9.51E+02	7.21E+02
779	NRC	a	a	9.51E+02	7.21E+02
780	NRC	a	a	9.49E+02	7.20E+02
781	NRC	a	a	9.49E+02	7.20E+02
782	NRC	a	a	9.44E+02	7.16E+02
783	NRC	a	a	9.38E+02	7.11E+02
784	NRC	a	a	9.22E+02	6.99E+02
785	NRC	a	a	9.22E+02	6.99E+02
786	NRC	a	a	9.21E+02	6.98E+02
787	NRC	a	a	9.10E+02	6.90E+02
788	NRC	a	a	9.10E+02	6.90E+02
789	NRC	a	a	9.08E+02	6.89E+02
790	NRC	a	a	9.08E+02	6.89E+02
791	NRC	a	a	9.06E+02	6.87E+02
792	NRC	a	a	9.06E+02	6.87E+02
793	NRC	a	a	9.03E+02	6.85E+02
794	NRC	a	a	9.03E+02	6.85E+02
795	NRC	a	a	8.97E+02	6.80E+02
796	NRC	a	a	8.92E+02	6.76E+02
797	NRC	a	a	8.90E+02	6.75E+02
798	NRC	a	a	8.81E+02	6.68E+02
799	NRC	a	a	8.81E+02	6.68E+02
800	NRC	a	a	8.78E+02	6.66E+02
801	NRC	a	a	8.78E+02	6.66E+02
802	NRC	a	a	8.76E+02	6.64E+02
803	NRC	a	a	8.73E+02	6.62E+02
804	NRC	a	a	8.72E+02	6.61E+02
805	NRC	a	a	8.72E+02	6.61E+02
806	NRC	a	a	8.71E+02	6.61E+02
807	NRC	a	a	8.70E+02	6.60E+02
808	NRC	a	a	8.64E+02	6.55E+02
809	NRC	a	a	8.62E+02	6.54E+02
810	NRC	a	a	8.61E+02	6.53E+02
811	NRC	a	a	8.51E+02	6.45E+02
812	NRC	a	a	8.51E+02	6.45E+02

Table 4 Cs-137 Sources Included in the GTCC LLW EIS Inventory (Continued)

#	Type	Assay Date	Activity at time of Assay (Ci)	2007 Activity (Ci)	2019 Activity (Ci)
813	NRC	a	a	8.51E+02	6.45E+02
814	NRC	a	a	8.50E+02	6.45E+02
815	NRC	a	a	8.50E+02	6.45E+02
816	NRC	a	a	8.49E+02	6.44E+02
817	NRC	a	a	8.46E+02	6.42E+02
818	NRC	a	a	8.43E+02	6.39E+02
819	NRC	a	a	8.39E+02	6.36E+02
820	NRC	a	a	8.36E+02	6.34E+02
821	NRC	a	a	8.35E+02	6.33E+02
822	NRC	a	a	8.33E+02	6.32E+02
823	NRC	a	a	8.33E+02	6.32E+02
824	NRC	a	a	8.33E+02	6.32E+02
825	NRC	a	a	8.31E+02	6.30E+02
826	NRC	a	a	8.31E+02	6.30E+02
827	NRC	a	a	8.25E+02	6.26E+02
828	NRC	a	a	8.16E+02	6.19E+02
829	NRC	a	a	8.16E+02	6.19E+02
830	NRC	a	a	8.12E+02	6.16E+02
831	NRC	a	a	8.11E+02	6.15E+02
832	NRC	a	a	8.11E+02	6.15E+02
833	NRC	a	a	8.09E+02	6.14E+02
834	NRC	a	a	8.06E+02	6.11E+02
835	NRC	a	a	8.02E+02	6.08E+02
836	NRC	a	a	8.01E+02	6.07E+02
837	NRC	a	a	7.98E+02	6.05E+02
838	NRC	a	a	7.96E+02	6.04E+02
839	NRC	a	a	7.96E+02	6.04E+02
840	NRC	a	a	7.96E+02	6.04E+02
841	NRC	a	a	7.92E+02	6.01E+02
842	NRC	a	a	7.92E+02	6.01E+02
843	NRC	a	a	7.91E+02	6.00E+02
844	NRC	a	a	7.81E+02	5.92E+02
845	NRC	a	a	7.80E+02	5.92E+02
846	NRC	a	a	7.79E+02	5.91E+02
847	NRC	a	a	7.77E+02	5.89E+02
848	NRC	a	a	7.75E+02	5.88E+02
849	NRC	a	a	7.74E+02	5.87E+02
850	NRC	a	a	7.68E+02	5.82E+02
851	NRC	a	a	7.61E+02	5.77E+02

Table 4 Cs-137 Sources Included in the GTCC LLW EIS Inventory (Continued)

#	Type	Assay Date	Activity at time of Assay (Ci)	2007 Activity (Ci)	2019 Activity (Ci)
852	NRC	a	a	7.60E+02	5.76E+02
853	NRC	a	a	7.60E+02	5.76E+02
854	NRC	a	a	7.57E+02	5.74E+02
855	NRC	a	a	7.51E+02	5.70E+02
856	NRC	a	a	7.50E+02	5.69E+02
857	NRC	a	a	7.48E+02	5.67E+02
858	NRC	a	a	7.48E+02	5.67E+02
859	NRC	a	a	7.48E+02	5.67E+02
860	NRC	a	a	7.48E+02	5.67E+02
861	NRC	a	a	7.47E+02	5.66E+02
862	NRC	a	a	7.47E+02	5.66E+02
863	NRC	a	a	7.47E+02	5.66E+02
864	NRC	a	a	7.41E+02	5.62E+02
865	NRC	a	a	7.37E+02	5.59E+02
866	NRC	a	a	7.31E+02	5.54E+02
867	NRC	a	a	7.28E+02	5.52E+02
868	NRC	a	a	7.28E+02	5.52E+02
869	NRC	a	a	7.27E+02	5.51E+02
870	NRC	a	a	7.25E+02	5.50E+02
871	NRC	a	a	7.24E+02	5.49E+02
872	NRC	a	a	7.22E+02	5.48E+02
873	NRC	a	a	7.17E+02	5.44E+02
874	NRC	a	a	7.14E+02	5.41E+02
875	NRC	a	a	7.12E+02	5.40E+02
876	NRC	a	a	7.11E+02	5.39E+02
877	NRC	a	a	7.09E+02	5.38E+02
878	NRC	a	a	7.07E+02	5.36E+02
879	NRC	a	a	7.07E+02	5.36E+02
880	NRC	a	a	7.06E+02	5.35E+02
881	NRC	a	a	6.80E+02	5.16E+02
882	NRC	a	a	6.79E+02	5.15E+02
883	NRC	a	a	6.79E+02	5.15E+02
884	NRC	a	a	6.76E+02	5.13E+02
885	NRC	a	a	6.76E+02	5.13E+02
886	NRC	a	a	6.72E+02	5.10E+02
887	NRC	a	a	6.65E+02	5.04E+02
888	NRC	a	a	6.63E+02	5.03E+02
889	NRC	a	a	6.63E+02	5.03E+02
890	NRC	a	a	6.63E+02	5.03E+02

Table 4 Cs-137 Sources Included in the GTCC LLW EIS Inventory (Continued)

#	Type	Assay Date	Activity at time of Assay (Ci)	2007 Activity (Ci)	2019 Activity (Ci)
891	NRC	a	a	6.63E+02	5.03E+02
892	NRC	a	a	6.63E+02	5.03E+02
893	NRC	a	a	6.63E+02	5.03E+02
894	NRC	a	a	6.60E+02	5.01E+02
895	NRC	a	a	6.58E+02	4.99E+02
896	NRC	a	a	6.44E+02	4.88E+02
897	NRC	a	a	6.26E+02	4.75E+02
898	NRC	a	a	6.26E+02	4.75E+02
899	NRC	a	a	6.17E+02	4.68E+02
900	NRC	a	a	6.15E+02	4.66E+02
901	NRC	a	a	6.15E+02	4.66E+02
902	NRC	a	a	6.10E+02	4.63E+02
903	NRC	a	a	6.08E+02	4.61E+02
904	NRC	a	a	6.07E+02	4.60E+02
905	NRC	a	a	6.00E+02	4.55E+02
906	NRC	a	a	5.87E+02	4.45E+02
907	NRC	a	a	5.83E+02	4.42E+02
908	NRC	a	a	5.74E+02	4.35E+02
909	NRC	a	a	5.72E+02	4.34E+02
910	NRC	a	a	5.67E+02	4.30E+02
911	NRC	a	a	5.65E+02	4.28E+02
912	NRC	a	a	5.64E+02	4.28E+02
913	NRC	a	a	5.61E+02	4.25E+02
914	NRC	a	a	5.58E+02	4.23E+02
915	NRC	a	a	5.58E+02	4.23E+02
916	NRC	a	a	5.57E+02	4.22E+02
917	NRC	a	a	5.54E+02	4.20E+02
918	NRC	a	a	5.53E+02	4.19E+02
919	NRC	a	a	5.53E+02	4.19E+02
920	NRC	a	a	5.46E+02	4.14E+02
921	NRC	a	a	5.39E+02	4.09E+02
922	NRC	a	a	5.37E+02	4.07E+02
923	NRC	a	a	5.27E+02	4.00E+02
924	NRC	a	a	5.26E+02	3.99E+02
925	NRC	a	a	5.25E+02	3.98E+02
926	NRC	a	a	5.17E+02	3.92E+02
927	NRC	a	a	5.14E+02	3.90E+02
928	NRC	a	a	5.14E+02	3.90E+02
929	NRC	a	a	5.09E+02	3.86E+02

Table 4 Cs-137 Sources Included in the GTCC LLW EIS Inventory (Continued)

#	Type	Assay Date	Activity at time of Assay (Ci)	2007 Activity (Ci)	2019 Activity (Ci)
930	NRC	a	a	5.07E+02	3.84E+02
931	NRC	a	a	5.07E+02	3.84E+02
932	NRC	a	a	5.00E+02	3.79E+02
933	NRC	a	a	4.92E+02	3.73E+02
934	NRC	a	a	4.92E+02	3.73E+02
935	NRC	a	a	4.87E+02	3.69E+02
936	NRC	a	a	4.84E+02	3.67E+02
937	NRC	a	a	4.82E+02	3.66E+02
938	NRC	a	a	4.81E+02	3.65E+02
939	NRC	a	a	4.81E+02	3.65E+02
940	NRC	a	a	4.79E+02	3.63E+02
941	NRC	a	a	4.76E+02	3.61E+02
942	NRC	a	a	4.73E+02	3.59E+02
943	NRC	a	a	4.72E+02	3.58E+02
944	NRC	a	a	4.69E+02	3.56E+02
945	NRC	a	a	4.68E+02	3.55E+02
946	NRC	a	a	4.66E+02	3.53E+02
947	NRC	a	a	4.66E+02	3.53E+02
948	NRC	a	a	4.64E+02	3.52E+02
949	NRC	a	a	4.64E+02	3.52E+02
950	NRC	a	a	4.60E+02	3.49E+02
951	NRC	a	a	4.60E+02	3.49E+02
952	NRC	a	a	4.59E+02	3.48E+02
953	NRC	a	a	4.53E+02	3.44E+02
954	NRC	a	a	4.50E+02	3.41E+02
955	NRC	a	a	4.45E+02	3.37E+02
956	NRC	a	a	4.44E+02	3.37E+02
957	NRC	a	a	4.43E+02	3.36E+02
958	NRC	a	a	4.43E+02	3.36E+02
959	NRC	a	a	4.42E+02	3.35E+02
960	NRC	a	a	4.40E+02	3.34E+02
961	NRC	a	a	4.39E+02	3.33E+02
962	NRC	a	a	4.39E+02	3.33E+02
963	NRC	a	a	4.37E+02	3.31E+02
964	NRC	a	a	4.34E+02	3.29E+02
965	NRC	a	a	4.32E+02	3.28E+02
966	NRC	a	a	4.32E+02	3.28E+02
967	NRC	a	a	4.32E+02	3.28E+02
968	NRC	a	a	4.32E+02	3.28E+02

Table 4 Cs-137 Sources Included in the GTCC LLW EIS Inventory (Continued)

#	Type	Assay Date	Activity at time of Assay (Ci)	2007 Activity (Ci)	2019 Activity (Ci)
969	NRC	a	a	4.32E+02	3.28E+02
970	NRC	a	a	4.32E+02	3.28E+02
971	NRC	a	a	4.32E+02	3.28E+02
972	NRC	a	a	4.31E+02	3.27E+02
973	NRC	a	a	4.31E+02	3.27E+02
974	NRC	a	a	4.31E+02	3.27E+02
975	NRC	a	a	4.31E+02	3.27E+02
976	NRC	a	a	4.30E+02	3.26E+02
977	NRC	a	a	4.29E+02	3.25E+02
978	NRC	a	a	4.24E+02	3.22E+02
979	NRC	a	a	4.24E+02	3.22E+02
980	NRC	a	a	4.23E+02	3.21E+02
981	NRC	a	a	4.19E+02	3.18E+02
982	NRC	a	a	4.18E+02	3.17E+02
983	NRC	a	a	4.18E+02	3.17E+02
984	NRC	a	a	4.16E+02	3.15E+02
985	NRC	a	a	4.12E+02	3.12E+02
986	NRC	a	a	4.12E+02	3.12E+02
987	NRC	a	a	4.10E+02	3.11E+02
988	NRC	a	a	4.10E+02	3.11E+02
989	NRC	a	a	4.10E+02	3.11E+02
990	NRC	a	a	4.09E+02	3.10E+02
991	NRC	a	a	4.09E+02	3.10E+02
992	NRC	a	a	4.08E+02	3.09E+02
993	NRC	a	a	4.08E+02	3.09E+02
994	NRC	a	a	4.08E+02	3.09E+02
995	NRC	a	a	4.07E+02	3.09E+02
996	NRC	a	a	4.07E+02	3.09E+02
997	NRC	a	a	4.07E+02	3.09E+02
998	NRC	a	a	4.05E+02	3.07E+02
999	NRC	a	a	4.05E+02	3.07E+02
1000	NRC	a	a	4.05E+02	3.07E+02
1001	NRC	a	a	4.05E+02	3.07E+02
1002	NRC	a	a	4.05E+02	3.07E+02
1003	NRC	a	a	4.05E+02	3.07E+02
1004	NRC	a	a	4.04E+02	3.06E+02
1005	NRC	a	a	4.03E+02	3.06E+02
1006	NRC	a	a	4.02E+02	3.05E+02
1007	NRC	a	a	4.02E+02	3.05E+02

Table 4 Cs-137 Sources Included in the GTCC LLW EIS Inventory (Continued)

#	Type	Assay Date	Activity at time of Assay (Ci)	2007 Activity (Ci)	2019 Activity (Ci)
1008	NRC	a	a	4.01E+02	3.04E+02
1009	NRC	a	a	4.00E+02	3.03E+02
1010	NRC	a	a	3.99E+02	3.03E+02
1011	NRC	a	a	3.99E+02	3.03E+02
1012	NRC	a	a	3.99E+02	3.03E+02
1013	NRC	a	a	3.98E+02	3.02E+02
1014	NRC	a	a	3.96E+02	3.00E+02
1015	NRC	a	a	3.95E+02	3.00E+02
1016	NRC	a	a	3.95E+02	3.00E+02
1017	NRC	a	a	3.95E+02	3.00E+02
1018	NRC	a	a	3.95E+02	3.00E+02
1019	NRC	a	a	3.93E+02	2.98E+02
1020	NRC	a	a	3.93E+02	2.98E+02
1021	NRC	a	a	3.93E+02	2.98E+02
1022	NRC	a	a	3.93E+02	2.98E+02
1023	NRC	a	a	3.91E+02	2.97E+02
1024	NRC	a	a	3.91E+02	2.97E+02
1025	NRC	a	a	3.91E+02	2.97E+02
1026	NRC	a	a	3.91E+02	2.97E+02
1027	NRC	a	a	3.87E+02	2.93E+02
1028	NRC	a	a	3.85E+02	2.92E+02
1029	NRC	a	a	3.85E+02	2.92E+02
1030	NRC	a	a	3.83E+02	2.90E+02
1031	NRC	a	a	3.80E+02	2.88E+02
1032	NRC	a	a	3.79E+02	2.87E+02
1033	NRC	a	a	3.79E+02	2.87E+02
1034	NRC	a	a	3.78E+02	2.87E+02
1035	NRC	a	a	3.77E+02	2.86E+02
1036	NRC	a	a	3.76E+02	2.85E+02
1037	NRC	a	a	3.76E+02	2.85E+02
1038	NRC	a	a	3.76E+02	2.85E+02
1039	NRC	a	a	3.74E+02	2.84E+02
1040	NRC	a	a	3.74E+02	2.84E+02
1041	NRC	a	a	3.74E+02	2.84E+02
1042	NRC	a	a	3.74E+02	2.84E+02
1043	NRC	a	a	3.73E+02	2.83E+02
1044	NRC	a	a	3.73E+02	2.83E+02
1045	NRC	a	a	3.73E+02	2.83E+02
1046	NRC	a	a	3.73E+02	2.83E+02

Table 4 Cs-137 Sources Included in the GTCC LLW EIS Inventory (Continued)

#	Type	Assay Date	Activity at time of Assay (Ci)	2007 Activity (Ci)	2019 Activity (Ci)
1047	NRC	a	a	3.73E+02	2.83E+02
1048	NRC	a	a	3.72E+02	2.82E+02
1049	NRC	a	a	3.71E+02	2.81E+02
1050	NRC	a	a	3.71E+02	2.81E+02
1051	NRC	a	a	3.71E+02	2.81E+02
1052	NRC	a	a	3.69E+02	2.80E+02
1053	NRC	a	a	3.68E+02	2.79E+02
1054	NRC	a	a	3.68E+02	2.79E+02
1055	NRC	a	a	3.68E+02	2.79E+02
1056	NRC	a	a	3.67E+02	2.78E+02
1057	NRC	a	a	3.67E+02	2.78E+02
1058	NRC	a	a	3.66E+02	2.78E+02
1059	NRC	a	a	3.65E+02	2.77E+02
1060	NRC	a	a	3.65E+02	2.77E+02
1061	NRC	a	a	3.65E+02	2.77E+02
1062	NRC	a	a	3.65E+02	2.77E+02
1063	NRC	a	a	3.65E+02	2.77E+02
1064	NRC	a	a	3.65E+02	2.77E+02
1065	NRC	a	a	3.65E+02	2.77E+02
1066	NRC	a	a	3.65E+02	2.77E+02
1067	NRC	a	a	3.65E+02	2.77E+02
1068	NRC	a	a	3.65E+02	2.77E+02
1069	NRC	a	a	3.64E+02	2.76E+02
1070	NRC	a	a	3.64E+02	2.76E+02
1071	NRC	a	a	3.64E+02	2.76E+02
1072	NRC	a	a	3.63E+02	2.75E+02
1073	NRC	a	a	3.63E+02	2.75E+02
1074	NRC	a	a	3.63E+02	2.75E+02
1075	NRC	a	a	3.63E+02	2.75E+02
1076	NRC	a	a	3.62E+02	2.75E+02
1077	NRC	a	a	3.62E+02	2.75E+02
1078	NRC	a	a	3.61E+02	2.74E+02
1079	NRC	a	a	3.61E+02	2.74E+02
1080	NRC	a	a	3.61E+02	2.74E+02
1081	NRC	a	a	3.61E+02	2.74E+02
1082	NRC	a	a	3.61E+02	2.74E+02
1083	NRC	a	a	3.61E+02	2.74E+02
1084	NRC	a	a	3.61E+02	2.74E+02
1085	NRC	a	a	3.60E+02	2.73E+02

Table 4 Cs-137 Sources Included in the GTCC LLW EIS Inventory (Continued)

#	Type	Assay Date	Activity at time of Assay (Ci)	2007 Activity (Ci)	2019 Activity (Ci)
1086	NRC	a	a	3.59E+02	2.72E+02
1087	NRC	a	a	3.59E+02	2.72E+02
1088	NRC	a	a	3.59E+02	2.72E+02
1089	NRC	a	a	3.57E+02	2.71E+02
1090	NRC	a	a	3.57E+02	2.71E+02
1091	NRC	a	a	3.55E+02	2.69E+02
1092	NRC	a	a	3.53E+02	2.68E+02
1093	NRC	a	a	3.53E+02	2.68E+02
1094	NRC	a	a	3.53E+02	2.68E+02
1095	NRC	a	a	3.53E+02	2.68E+02
1096	NRC	a	a	3.53E+02	2.68E+02
1097	NRC	a	a	3.52E+02	2.67E+02
1098	NRC	a	a	3.51E+02	2.66E+02
1099	NRC	a	a	3.48E+02	2.64E+02
1100	NRC	a	a	3.47E+02	2.63E+02
1101	NRC	a	a	3.47E+02	2.63E+02
1102	NRC	a	a	3.44E+02	2.61E+02
1103	NRC	a	a	3.40E+02	2.58E+02
1104	NRC	a	a	3.40E+02	2.58E+02
1105	NRC	a	a	3.40E+02	2.58E+02
1106	NRC	a	a	3.39E+02	2.57E+02
1107	NRC	a	a	3.39E+02	2.57E+02
1108	NRC	a	a	3.39E+02	2.57E+02
1109	NRC	a	a	3.38E+02	2.56E+02
1110	NRC	a	a	3.37E+02	2.56E+02
1111	NRC	a	a	3.37E+02	2.56E+02
1112	NRC	a	a	3.37E+02	2.56E+02
1113	NRC	a	a	3.37E+02	2.56E+02
1114	NRC	a	a	3.32E+02	2.52E+02
1115	NRC	a	a	3.30E+02	2.50E+02
1116	NRC	a	a	3.29E+02	2.49E+02
1117	NRC	a	a	3.27E+02	2.48E+02
1118	NRC	a	a	3.26E+02	2.47E+02
1119	NRC	a	a	3.26E+02	2.47E+02
1120	NRC	a	a	3.25E+02	2.46E+02
1121	NRC	a	a	3.23E+02	2.45E+02
1122	NRC	a	a	3.21E+02	2.43E+02
1123	NRC	a	a	3.20E+02	2.43E+02
1124	NRC	a	a	3.19E+02	2.42E+02

Table 4 Cs-137 Sources Included in the GTCC LLW EIS Inventory (Continued)

#	Type	Assay Date	Activity at time of Assay (Ci)	2007 Activity (Ci)	2019 Activity (Ci)
1125	NRC	a	a	3.13E+02	2.37E+02
1126	NRC	a	a	3.13E+02	2.37E+02
1127	NRC	a	a	3.11E+02	2.36E+02
1128	NRC	a	a	3.09E+02	2.34E+02
1129	NRC	a	a	3.06E+02	2.32E+02
1130	NRC	a	a	2.98E+02	2.26E+02
1131	NRC	a	a	2.95E+02	2.24E+02
1132	NRC	a	a	2.95E+02	2.24E+02
1133	NRC	a	a	2.88E+02	2.18E+02
1134	NRC	a	a	2.83E+02	2.15E+02
1135	NRC	a	a	2.82E+02	2.14E+02
1136	NRC	a	a	2.82E+02	2.14E+02
1137	NRC	a	a	2.81E+02	2.13E+02
1138	NRC	a	a	2.80E+02	2.12E+02
1139	NRC	a	a	2.80E+02	2.12E+02
1140	NRC	a	a	2.79E+02	2.12E+02
1141	NRC	a	a	2.79E+02	2.12E+02
1142	NRC	a	a	2.79E+02	2.12E+02
1143	NRC	a	a	2.77E+02	2.10E+02
1144	NRC	a	a	2.77E+02	2.10E+02
1145	NRC	a	a	2.76E+02	2.09E+02
1146	NRC	a	a	2.63E+02	1.99E+02
1147	NRC	a	a	2.60E+02	1.97E+02
1148	NRC	a	a	2.59E+02	1.96E+02
1149	NRC	a	a	2.57E+02	1.95E+02
1150	NRC	a	a	2.54E+02	1.93E+02
1151	NRC	a	a	2.49E+02	1.89E+02
1152	NRC	a	a	2.44E+02	1.85E+02
1153	NRC	a	a	2.42E+02	1.84E+02
1154	NRC	a	a	2.42E+02	1.84E+02
1155	NRC	a	a	2.36E+02	1.79E+02
1156	NRC	a	a	2.32E+02	1.76E+02
1157	NRC	a	a	2.31E+02	1.75E+02
1158	NRC	a	a	2.31E+02	1.75E+02
1159	NRC	a	a	2.30E+02	1.74E+02
1160	NRC	a	a	2.28E+02	1.73E+02
1161	NRC	a	a	2.26E+02	1.71E+02
1162	NRC	a	a	2.15E+02	1.63E+02
1163	NRC	a	a	2.13E+02	1.62E+02

Table 4 Cs-137 Sources Included in the GTCC LLW EIS Inventory (Continued)

#	Type	Assay Date	Activity at time of Assay (Ci)	2007 Activity (Ci)	2019 Activity (Ci)
1164	NRC	a	a	2.13E+02	1.62E+02
1165	NRC	a	a	2.13E+02	1.62E+02
1166	NRC	a	a	2.12E+02	1.61E+02
1167	NRC	a	a	2.07E+02	1.57E+02
1168	NRC	a	a	2.03E+02	1.54E+02
1169	NRC	a	a	2.00E+02	1.52E+02
1170	NRC	a	a	1.99E+02	1.51E+02
1171	NRC	a	a	1.98E+02	1.50E+02
1172	NRC	a	a	1.98E+02	1.50E+02
1173	NRC	a	a	1.93E+02	1.46E+02
1174	NRC	a	a	1.91E+02	1.45E+02
1175	NRC	a	a	1.90E+02	1.44E+02
1176	NRC	a	a	1.90E+02	1.44E+02
1177	NRC	a	a	1.89E+02	1.43E+02
1178	NRC	a	a	1.87E+02	1.42E+02
1179	NRC	a	a	1.87E+02	1.42E+02
1180	NRC	a	a	1.87E+02	1.42E+02
1181	NRC	a	a	1.87E+02	1.42E+02
1182	NRC	a	a	1.87E+02	1.42E+02
1183	NRC	a	a	1.84E+02	1.40E+02
1184	NRC	a	a	1.82E+02	1.38E+02
1185	NRC	a	a	1.81E+02	1.37E+02
1186	NRC	a	a	1.81E+02	1.37E+02
1187	NRC	a	a	1.81E+02	1.37E+02
1188	NRC	a	a	1.81E+02	1.37E+02
1189	NRC	a	a	1.79E+02	1.36E+02
1190	NRC	a	a	1.79E+02	1.36E+02
1191	NRC	a	a	1.79E+02	1.36E+02
1192	NRC	a	a	1.77E+02	1.34E+02
1193	NRC	a	a	1.74E+02	1.32E+02
1194	NRC	a	a	1.73E+02	1.31E+02
1195	NRC	a	a	1.71E+02	1.30E+02
1196	NRC	a	a	1.71E+02	1.30E+02
1197	NRC	a	a	1.70E+02	1.29E+02
1198	NRC	a	a	1.70E+02	1.29E+02
1199	NRC	a	a	1.70E+02	1.29E+02
1200	NRC	a	a	1.70E+02	1.29E+02
1201	NRC	a	a	1.69E+02	1.28E+02
1202	NRC	a	a	1.69E+02	1.28E+02

Table 4 Cs-137 Sources Included in the GTCC LLW EIS Inventory (Continued)

#	Type	Assay Date	Activity at time of Assay (Ci)	2007 Activity (Ci)	2019 Activity (Ci)
1203	NRC	a	a	1.69E+02	1.28E+02
1204	NRC	a	a	1.69E+02	1.28E+02
1205	NRC	a	a	1.69E+02	1.28E+02
1206	NRC	a	a	1.69E+02	1.28E+02
1207	NRC	a	a	1.69E+02	1.28E+02
1208	NRC	a	a	1.68E+02	1.27E+02
1209	NRC	a	a	1.67E+02	1.27E+02
1210	NRC	a	a	1.67E+02	1.27E+02
1211	NRC	a	a	1.67E+02	1.27E+02
1212	NRC	a	a	1.67E+02	1.27E+02
1213	NRC	a	a	1.67E+02	1.27E+02
1214	NRC	a	a	1.67E+02	1.27E+02
1215	NRC	a	a	1.67E+02	1.27E+02
1216	NRC	a	a	1.67E+02	1.27E+02
1217	NRC	a	a	1.67E+02	1.27E+02
1218	NRC	a	a	1.67E+02	1.27E+02
1219	NRC	a	a	1.66E+02	1.26E+02
1220	NRC	a	a	1.66E+02	1.26E+02
1221	NRC	a	a	1.66E+02	1.26E+02
1222	NRC	a	a	1.66E+02	1.26E+02
1223	NRC	a	a	1.66E+02	1.26E+02
1224	NRC	a	a	1.66E+02	1.26E+02
1225	NRC	a	a	1.65E+02	1.25E+02
1226	NRC	a	a	1.65E+02	1.25E+02
1227	NRC	a	a	1.65E+02	1.25E+02
1228	NRC	a	a	1.65E+02	1.25E+02
1229	NRC	a	a	1.65E+02	1.25E+02
1230	NRC	a	a	1.65E+02	1.25E+02
1231	NRC	a	a	1.65E+02	1.25E+02
1232	NRC	a	a	1.65E+02	1.25E+02
1233	NRC	a	a	1.65E+02	1.25E+02
1234	NRC	a	a	1.65E+02	1.25E+02
1235	NRC	a	a	1.64E+02	1.24E+02
1236	NRC	a	a	1.63E+02	1.24E+02
1237	NRC	a	a	1.63E+02	1.24E+02
1238	NRC	a	a	1.60E+02	1.21E+02
1239	NRC	a	a	1.60E+02	1.21E+02
1240	NRC	a	a	1.60E+02	1.21E+02
1241	NRC	a	a	1.58E+02	1.20E+02

Table 4 Cs-137 Sources Included in the GTCC LLW EIS Inventory (Continued)

#	Type	Assay Date	Activity at time of Assay (Ci)	2007 Activity (Ci)	2019 Activity (Ci)
1242	NRC	a	a	1.57E+02	1.19E+02
1243	NRC	a	a	1.54E+02	1.17E+02
1244	NRC	a	a	1.52E+02	1.15E+02
1245	NRC	a	a	1.50E+02	1.14E+02
1246	NRC	a	a	1.41E+02	1.07E+02
1247	NRC	a	a	1.37E+02	1.04E+02
1248	NRC	a	a	1.36E+02	1.03E+02
1249	NRC	a	a	1.35E+02	1.02E+02
1250	NRC	a	a	1.33E+02	1.01E+02
1251	NRC	a	a	1.30E+02	9.86E+01
1252	NRC	a	a	1.28E+02	9.71E+01
1253	NRC	a	a	1.22E+02	9.25E+01
1254	NRC	a	a	1.22E+02	9.25E+01
1255	NRC	a	a	1.18E+02	8.95E+01
1256	NRC	a	a	1.13E+02	8.57E+01
1257	NRC	a	a	1.13E+02	8.57E+01
1258	NRC	a	a	1.12E+02	8.49E+01
1259	NRC	a	a	1.11E+02	8.42E+01
1260	NRC	a	a	1.11E+02	8.42E+01
1261	NRC	a	a	1.11E+02	8.42E+01
1262	NRC	a	a	1.10E+02	8.34E+01
1263	NRC	a	a	1.10E+02	8.34E+01
1264	NRC	a	a	1.09E+02	8.27E+01
1265	NRC	a	a	1.08E+02	8.19E+01
1266	NRC	a	a	1.07E+02	8.11E+01
1267	NRC	a	a	1.07E+02	8.11E+01
1268	NRC	a	a	1.06E+02	8.04E+01
1269	NRC	a	a	1.05E+02	7.96E+01
1270	NRC	a	a	1.04E+02	7.89E+01
1271	NRC	a	a	1.04E+02	7.89E+01
1272	NRC	a	a	1.03E+02	7.81E+01
1273	NRC	a	a	1.02E+02	7.74E+01
1274	NRC	a	a	1.02E+02	7.74E+01
1275	NRC	a	a	1.02E+02	7.74E+01
1276	NRC	a	a	1.02E+02	7.74E+01
1277	NRC	a	a	1.01E+02	7.66E+01
1278	NRC	a	a	9.97E+01	7.56E+01
1279	NRC	a	a	9.86E+01	7.48E+01
1280	NRC	a	a	9.86E+01	7.48E+01

Table 4 Cs-137 Sources Included in the GTCC LLW EIS Inventory (Continued)

#	Type	Assay Date	Activity at time of Assay (Ci)	2007 Activity (Ci)	2019 Activity (Ci)
1281	NRC	a	a	9.86E+01	7.48E+01
1282	NRC	a	a	9.86E+01	7.48E+01
1283	NRC	a	a	9.86E+01	7.48E+01
1284	NRC	a	a	9.86E+01	7.48E+01
1285	NRC	a	a	9.86E+01	7.48E+01
1286	NRC	a	a	9.86E+01	7.48E+01
1287	NRC	a	a	9.85E+01	7.47E+01
1288	NRC	a	a	9.81E+01	7.44E+01
1289	NRC	a	a	9.68E+01	7.34E+01
1290	NRC	a	a	9.52E+01	7.22E+01
1291	NRC	a	a	9.52E+01	7.22E+01
1292	NRC	a	a	9.51E+01	7.21E+01
1293	NRC	a	a	9.38E+01	7.11E+01
1294	NRC	a	a	9.38E+01	7.11E+01
1295	NRC	a	a	9.37E+01	7.11E+01
1296	NRC	a	a	9.31E+01	7.06E+01
1297	NRC	a	a	9.28E+01	7.04E+01
1298	NRC	a	a	9.27E+01	7.03E+01
1299	NRC	a	a	9.20E+01	6.98E+01
1300	NRC	a	a	9.12E+01	6.92E+01
1301	NRC	a	a	9.10E+01	6.90E+01
1302	NRC	a	a	9.06E+01	6.87E+01
1303	NRC	a	a	9.06E+01	6.87E+01
1304	NRC	a	a	9.05E+01	6.86E+01
1305	NRC	a	a	8.98E+01	6.81E+01
1306	NRC	a	a	8.87E+01	6.73E+01
1307	NRC	a	a	8.72E+01	6.61E+01
1308	NRC	a	a	8.70E+01	6.60E+01
1309	NRC	a	a	8.69E+01	6.59E+01
1310	NRC	a	a	8.68E+01	6.58E+01
1311	NRC	a	a	8.68E+01	6.58E+01
1312	NRC	a	a	8.68E+01	6.58E+01
1313	NRC	a	a	8.68E+01	6.58E+01
1314	NRC	a	a	8.66E+01	6.57E+01
1315	NRC	a	a	8.62E+01	6.54E+01
1316	NRC	a	a	8.61E+01	6.53E+01
1317	NRC	a	a	8.56E+01	6.49E+01
1318	NRC	a	a	8.45E+01	6.41E+01
1319	NRC	a	a	8.41E+01	6.38E+01

Table 4 Cs-137 Sources Included in the GTCC LLW EIS Inventory (Continued)

#	Type	Assay Date	Activity at time of Assay (Ci)	2007 Activity (Ci)	2019 Activity (Ci)
1320	NRC	a	a	8.39E+01	6.36E+01
1321	NRC	a	a	8.38E+01	6.35E+01
1322	NRC	a	a	8.37E+01	6.35E+01
1323	NRC	a	a	8.37E+01	6.35E+01
1324	NRC	a	a	8.20E+01	6.22E+01
1325	NRC	a	a	8.14E+01	6.17E+01
1326	NRC	a	a	8.11E+01	6.15E+01
1327	NRC	a	a	8.11E+01	6.15E+01
1328	NRC	a	a	8.05E+01	6.10E+01
1329	NRC	a	a	8.05E+01	6.10E+01
1330	NRC	a	a	8.02E+01	6.08E+01
1331	NRC	a	a	7.92E+01	6.01E+01
1332	NRC	a	a	7.81E+01	5.92E+01
1333	NRC	a	a	7.79E+01	5.91E+01
1334	NRC	a	a	7.73E+01	5.86E+01
1335	NRC	a	a	7.73E+01	5.86E+01
1336	NRC	a	a	7.71E+01	5.85E+01
1337	NRC	a	a	7.68E+01	5.82E+01
1338	NRC	a	a	7.62E+01	5.78E+01
1339	NRC	a	a	7.58E+01	5.75E+01
1340	NRC	a	a	7.53E+01	5.71E+01
1341	NRC	a	a	7.48E+01	5.67E+01
1342	NRC	a	a	7.47E+01	5.66E+01
1343	NRC	a	a	7.46E+01	5.66E+01
1344	NRC	a	a	7.46E+01	5.66E+01
1345	NRC	a	a	7.45E+01	5.65E+01
1346	NRC	a	a	7.45E+01	5.65E+01
1347	NRC	a	a	7.44E+01	5.64E+01
1348	NRC	a	a	7.43E+01	5.63E+01
1349	NRC	a	a	7.43E+01	5.63E+01
1350	NRC	a	a	7.43E+01	5.63E+01
1351	NRC	a	a	7.43E+01	5.63E+01
1352	NRC	a	a	7.43E+01	5.63E+01
1353	NRC	a	a	7.43E+01	5.63E+01
1354	NRC	a	a	7.43E+01	5.63E+01
1355	NRC	a	a	7.43E+01	5.63E+01
1356	NRC	a	a	7.42E+01	5.63E+01
1357	NRC	a	a	7.42E+01	5.63E+01
1358	NRC	a	a	7.42E+01	5.63E+01

Table 4 Cs-137 Sources Included in the GTCC LLW EIS Inventory (Continued)

#	Type	Assay Date	Activity at time of Assay (Ci)	2007 Activity (Ci)	2019 Activity (Ci)
1359	NRC	a	a	7.42E+01	5.63E+01
1360	NRC	a	a	7.42E+01	5.63E+01
1361	NRC	a	a	7.42E+01	5.63E+01
1362	NRC	a	a	7.42E+01	5.63E+01
1363	NRC	a	a	7.42E+01	5.63E+01
1364	NRC	a	a	7.42E+01	5.63E+01
1365	NRC	a	a	7.41E+01	5.62E+01
1366	NRC	a	a	7.41E+01	5.62E+01
1367	NRC	a	a	7.41E+01	5.62E+01
1368	NRC	a	a	7.36E+01	5.58E+01
1369	NRC	a	a	7.24E+01	5.49E+01
1370	NRC	a	a	7.24E+01	5.49E+01
1371	NRC	a	a	7.24E+01	5.49E+01
1372	NRC	a	a	7.16E+01	5.43E+01
1373	NRC	a	a	6.98E+01	5.29E+01
1374	NRC	a	a	6.96E+01	5.28E+01
1375	NRC	a	a	6.93E+01	5.26E+01
1376	NRC	a	a	6.61E+01	5.01E+01
1377	NRC	a	a	6.60E+01	5.01E+01
1378	NRC	a	a	6.59E+01	5.00E+01
1379	NRC	a	a	6.59E+01	5.00E+01
1380	NRC	a	a	6.57E+01	4.98E+01
1381	NRC	a	a	6.54E+01	4.96E+01
1382	NRC	a	a	6.53E+01	4.95E+01
1383	NRC	a	a	6.49E+01	4.92E+01
1384	NRC	a	a	6.48E+01	4.91E+01
1385	NRC	a	a	6.48E+01	4.91E+01
1386	NRC	a	a	6.43E+01	4.88E+01
1387	NRC	a	a	6.41E+01	4.86E+01
1388	NRC	a	a	6.41E+01	4.86E+01
1389	NRC	a	a	6.40E+01	4.85E+01
1390	NRC	a	a	6.36E+01	4.82E+01
1391	NRC	a	a	6.36E+01	4.82E+01
1392	NRC	a	a	6.34E+01	4.81E+01
1393	NRC	a	a	6.17E+01	4.68E+01
1394	NRC	a	a	6.01E+01	4.56E+01
1395	NRC	a	a	5.92E+01	4.49E+01
1396	NRC	a	a	5.87E+01	4.45E+01
1397	NRC	a	a	5.87E+01	4.45E+01

Table 4 Cs-137 Sources Included in the GTCC LLW EIS Inventory (Continued)

#	Type	Assay Date	Activity at time of Assay (Ci)	2007 Activity (Ci)	2019 Activity (Ci)
1398	NRC	a	a	5.87E+01	4.45E+01
1399	NRC	a	a	5.87E+01	4.45E+01
1400	NRC	a	a	5.81E+01	4.41E+01
1401	NRC	a	a	5.81E+01	4.41E+01
1402	NRC	a	a	5.77E+01	4.38E+01
1403	NRC	a	a	5.77E+01	4.38E+01
1404	NRC	a	a	5.56E+01	4.22E+01
1405	NRC	a	a	5.56E+01	4.22E+01
1406	NRC	a	a	5.55E+01	4.21E+01
1407	NRC	a	a	5.39E+01	4.09E+01
1408	NRC	a	a	5.38E+01	4.08E+01
1409	NRC	a	a	5.37E+01	4.07E+01
1410	NRC	a	a	5.35E+01	4.06E+01
1411	NRC	a	a	5.35E+01	4.06E+01
1412	NRC	a	a	5.11E+01	3.88E+01
1413	NRC	a	a	5.05E+01	3.83E+01
1414	NRC	a	a	4.96E+01	3.76E+01
1415	NRC	a	a	4.90E+01	3.72E+01
1416	NRC	a	a	4.82E+01	3.66E+01
1417	NRC	a	a	4.68E+01	3.55E+01
1418	NRC	a	a	4.67E+01	3.54E+01
1419	NRC	a	a	4.57E+01	3.47E+01
1420	NRC	a	a	4.54E+01	3.44E+01
1421	NRC	a	a	4.50E+01	3.41E+01
1422	NRC	a	a	4.50E+01	3.41E+01
1423	NRC	a	a	4.50E+01	3.41E+01
1424	NRC	a	a	4.48E+01	3.40E+01
1425	NRC	a	a	4.47E+01	3.39E+01
1426	NRC	a	a	4.47E+01	3.39E+01
1427	NRC	a	a	4.43E+01	3.36E+01
1428	NRC	a	a	4.34E+01	3.29E+01
1429	NRC	a	a	4.34E+01	3.29E+01
1430	NRC	a	a	4.34E+01	3.29E+01
1431	NRC	a	a	4.34E+01	3.29E+01
1432	NRC	a	a	4.34E+01	3.29E+01
1433	NRC	a	a	4.34E+01	3.29E+01
1434	NRC	a	a	4.34E+01	3.29E+01
1435	NRC	a	a	4.34E+01	3.29E+01
1436	NRC	a	a	4.34E+01	3.29E+01

Table 4 Cs-137 Sources Included in the GTCC LLW EIS Inventory (Continued)

#	Type	Assay Date	Activity at time of Assay (Ci)	2007 Activity (Ci)	2019 Activity (Ci)
1437	NRC	a	a	4.30E+01	3.26E+01
1438	NRC	a	a	4.29E+01	3.25E+01
1439	NRC	a	a	4.28E+01	3.25E+01
1440	NRC	a	a	4.28E+01	3.25E+01
1441	NRC	a	a	4.27E+01	3.24E+01
1442	NRC	a	a	4.27E+01	3.24E+01
1443	NRC	a	a	4.22E+01	3.20E+01
1444	NRC	a	a	4.22E+01	3.20E+01
1445	NRC	a	a	4.22E+01	3.20E+01
1446	NRC	a	a	4.22E+01	3.20E+01
1447	NRC	a	a	4.22E+01	3.20E+01
1448	NRC	a	a	4.19E+01	3.18E+01
1449	NRC	a	a	4.19E+01	3.18E+01
1450	NRC	a	a	4.17E+01	3.16E+01
1451	NRC	a	a	4.16E+01	3.15E+01
1452	NRC	a	a	4.16E+01	3.15E+01
1453	NRC	a	a	4.16E+01	3.15E+01
1454	NRC	a	a	4.16E+01	3.15E+01
1455	NRC	a	a	4.16E+01	3.15E+01
1456	NRC	a	a	4.16E+01	3.15E+01
1457	NRC	a	a	4.12E+01	3.12E+01
1458	NRC	a	a	4.11E+01	3.12E+01
1459	NRC	a	a	4.11E+01	3.12E+01
1460	NRC	a	a	4.10E+01	3.11E+01
1461	NRC	a	a	4.04E+01	3.06E+01
1462	NRC	a	a	4.02E+01	3.05E+01
1463	NRC	a	a	3.97E+01	3.01E+01
1464	NRC	a	a	3.93E+01	2.98E+01
1465	NRC	a	a	3.93E+01	2.98E+01
1466	NRC	a	a	3.78E+01	2.87E+01
1467	NRC	a	a	3.76E+01	2.85E+01
1468	NRC	a	a	3.65E+01	2.77E+01
1469	NRC	a	a	3.52E+01	2.67E+01
1470	NRC	a	a	3.48E+01	2.64E+01
1471	NRC	a	a	3.46E+01	2.62E+01
1472	NRC	a	a	3.45E+01	2.62E+01
1473	NRC	a	a	3.41E+01	2.59E+01
1474	NRC	a	a	3.40E+01	2.58E+01
1475	NRC	a	a	3.40E+01	2.58E+01

Table 4 Cs-137 Sources Included in the GTCC LLW EIS Inventory (Continued)

#	Type	Assay Date	Activity at time of Assay (Ci)	2007 Activity (Ci)	2019 Activity (Ci)
1476	NRC	a	a	3.31E+01	2.51E+01
1477	NRC	a	a	3.31E+01	2.51E+01
1478	NRC	a	a	3.31E+01	2.51E+01
1479	NRC	a	a	3.31E+01	2.51E+01
1480	NRC	a	a	3.25E+01	2.46E+01
1481	NRC	a	a	3.09E+01	2.34E+01
			Projected Subtotal	**2.37E+06**	**1.80E+06**
			TOTAL	**2.38E+06**	**1.81E+06**

[a] Activities provided by the NRC were as of 1/1/2007.

3 References

KAPL (2002). Nuclides and Isotopes, Chart of the Nuclides. Sixteenth Edition. KAPL, Inc.

NRC (1995). Issuance of Final Branch Technical Position on Concentration Averaging and Encapsulation, Revision in Part to Waste Classification and Technical Position. ERMS pending. Nuclear Regulatory Commission. Washington, D.C.

U. S. DOE (2007). Greater-Than-Class C Low-Level Radioactive Waste and DOE Greater-Than-Class C-Like Waste Inventory Estimates. U. S. Department of Energy. Washington, DC.

APPENDIX J

Calculation of the Loaded Weight of the RH Canister for the Greater-Than-Class C Low-Level Radioactive Waste Environmental Impact Statement Evaluations

Trone, J. R. and K. Hendren

EIS PRIVILEGED

Calculation of the Loaded Weight of the RH Canister for the Greater-Than-Class-C Low-Level Radioactive Waste Environmental Impact Statement Evaluations

Author:	Janis Trone		9/6/07
	Print	Signature	Date
Author:	Keith Hendren	for	9/6/07
	Print	Signature	Date
Technical Review:	Brian Fox		9/6/07
Print		Signature	Date
Management Review:	Moo Lee		9/6/07
Print		Signature	Date

GTCC-EIS:AR:3.2:545078

CONTENTS

1. INTRODUCTION 3
2. CALCULATIONS 3
   2.1 Average Volume of Waste 3
   2.2 Mass of Waste 3
   2.3 Weight of Loaded RH Canister 4
3. REFERENCE 4

1. INTRODUCTION

The purpose of this document is to calculate the loaded weight of the RH canister which may be used for the packaging of Greater-Than-Class-C (GTCC) low level waste (LLW) from nuclear utilities. The calculations were done in support of the environmental impact statement (EIS) to evaluate the potential environmental impacts from the construction, operation, closure and post-closure performance of a disposal facility for GTCC LLW and potentially Department of Energy (DOE) GTCC like waste.

2. CALCULATIONS

GTCC LLW from nuclear utilities may be packaged in RH canisters for disposal. Schelling, et al. (2007a) reports 661.43 m^3 (4.04E+07 in^3) of GTCC LLW from nuclear utilities, and estimates 2573 RH canisters are needed to package the waste for disposal.

2.1 AVERAGE VOLUME OF WASTE

If the total volume of nuclear utility waste is 661.43 m^3 (4.04E+07 in^3), and the total number of RH canisters needed to package the waste is 2573, then the average volume of nuclear utility waste per RH canister is calculated as:

$$V_{nuw} = T_{nuw} / n_C \qquad (1)$$

where:

V_{nuw} = Average volume of nuclear utility waste per canister
T_{nuw} = Total volume of nuclear utility waste (661.43 m^3 (4.04E+07 in^3))
n_C = Total number of RH canisters for nuclear utility waste (2573 canisters)

The average volume of nuclear utility waste in each RH canister is 0.257 m^3 (1.57E+04 in^3).

2.2 MASS OF WASTE

The mass of the nuclear utility waste in an RH canister is calculated as:

$$M_{nuw} = V_{nuw} \; X \; d_{ss} \qquad (2)$$

where:

M_{nuw} = Mass of nuclear utility waste per RH canister
d_{ss} = Density of nuclear utility waste (8044 kg/m^3 (.29 lbs/in^3), (Schermerhorn 2007))

The calculated mass of nuclear utility waste in each RH canister is 2067.31 kg (4548.08 lbs).

2.3 WEIGHT OF LOADED RH CANISTER

The weight of the loaded RH canister can be calculated as:

$$W_{lc} = M_{nuw} + W_c \quad (3)$$

where:

W_{lc} = Weight of a loaded RH canister
W_c = Weight of an empty RH canister (800 kg (1760 lbs), (U. S. DOE 1995b))

The calculated weight of a loaded RH canister is 2867.31 kg (6308.08 lbs).

Conversions
1 kg = 2.20lbs
1 in = 0.0254m

3. REFERENCE

Schelling, J., C. D. Leigh and J. R. Trone (2007). Supporting Nuclear Utility Inventory Estimates for the Greater-Than-Class-C Low-Level Radioactive Waste Environmental Impact Statement Evaluations. ERMS pending. Sandia National Laboratories. Carlsbad, NM.

Schermerhorn, J. R. (2007). Hand Calculations for GTCC Waste Container. ERMS 546601. AMEC.

U. S. DOE (1995). Remote Handled Transuranic Waste Study, DOE/CAO-95-1095. U.S. Department of Energy. Carlsbad, NM.

APPENDIX K

Supporting Shielding Calculations for the Greater Than Class C Low Level Radioactive Waste Environmental Impact Statement Evaluations

Weiner, R. F., D. Osborn, et al.

Supporting Shielding Calculations for the Greater-Than-Class-C Low-Level Radioactive Waste Environmental Impact Statement Evaluations

Author:	Ruth Weiner	Matthew Dennis on behalf of Ruth Weiner	6/20/07
	Print	Signature	Date
Author:	Doug Osborn		6/20/07
	Print	Signature	Date
Technical Review:	Matt Dennis	Matthew Dennis	6/20/07
	Print	Signature	Date
Management Review:	Christi Leigh		6/20/07
	Print	Signature	Date

CONTENTS

1. INTRODUCTION 4

2. PROBLEM DESCRIPTION 4

3. APPRAOCH 4
   3.1 GENERAL ASSUMPTIONS 4
   3.2 EXPOSURE POINTS 5
   3.3 INTEGRATION TECHNIQUE 6
   3.4 SHIELDING PARAMETERS 7

4. RESULTS 8
   4.1 UNSHIELDED CONTAINER 8
   4.2 SHIELDED CONTAINER 11

5. CONCLUSION 12

6. REFERENCE 12

TABLES

Table 1. Parameters for Shielding Calculations with Lead and Depleted Uranium 7

Table 2. Unshielded Container Results 9

Table 3. Container with 5.25-inches of Lead Shielding. 11

Table 4. Container with 2.9-inches of Depleted Uranium Shielding. 12

FIGURES

Figure 1. Example of Unshielded Exposure Points 6

Figure 2. Example of Shielded Exposure Points 8

Figure 3. Dose rate along the outside of an Unshielded Container 11

1. INTRODUCTION

The focus of the upcoming Greater-Than-Class-C (GTCC) low-level radioactive waste (LLW) Disposal Environmental Impact Statement (EIS) is to evaluate the potential environmental impacts from the construction, operation, closure and post-closure performance of a disposal facility for GTCC LLW and potentially Department of Energy (DOE) GTCC-like waste. This document presents shielding calculations for canisters of activated metal that might be expected from nuclear reactors in the U.S.

2. PROBLEM DESCRIPTION

The calculations are for a package of activated metal GTCC LLW that might be expected from nuclear reactors in the U.S. It is assumed that the canister contains 200,000 curies of radioactive material with a sizable fraction being Co-60. The dose from both an unshielded and a shielded package containing Co-60 was calculated using the code Microshield[1].

3. APPROACH

The calculations were conducted using assumptions developed for the MicroShield 7.01 code. The exposure points and integration were selected from experience. The shielding parameters were selected from material physical properties.

3.1 GENERAL ASSUMPTIONS

It is assumed that the source is a cylinder, 105 inches in length and 26 inches in diameter. The source contains Co-60 with an activity of 5.17E+04 Ci. The source is contained in a package that is a cylinder 110 inches long and 28 inches in diameter. The package is constructed of Stainless Steel 304 with a density of 8.00 g/cm^3. The density of Co-60 is 8.86 g/cm^3, and the density of air is 0.00122 g/cm^3.

[1] MicroShield® 7.01 is a computer code designed to provide a model to be used for shielding calculation and design in different geometrical scenarios. MicroShield 7.01, a code developed by Grove Software, was used to model the dose points.

The following assumptions were used in the dose calculation:

- The external (on-contact) dose measurements were assumed to be made ½ inch from the outside of the container.
- The source activity is assumed to be evenly and uniformly distributed in the container (i.e., not in lumps, rods, etc).
- Buildup represents the scattered photons and those generated in the shield. Buildup is assumed to be in the Co-60 source. MicroShield uses this in the calculation.
- The container of Co-60 is assumed to be sitting in air, so that any scatter, reflection, or absorption of ionizing radiation is by air.
- Co-60 is modeled as an iron material due to similar material properties and existing default in MicroShield.
- Stainless Steel is a custom material determined by its Austenitic standard.

3.2 EXPOSURE POINTS

Figure 1 is the diagram of the container that provides the basis for the MicroShield calculation. The exposure points indicated in Figure 1 representative example of the location of points for which the exposure rate was calculated. The location of the exposure points was chosen to represent locations at which a worker handling the container would be exposed.

Exposure points, the dots outside the container in Figure 1, begin 3 inches below the midpoint of the container. Exposure points are taken every inch along the length of the container (the Y-axis of the coordinate system). The exposure points end when the last point is 13 inches above the end cap.

Figure 1: Example of Unshielded Exposure Points

3.3 INTEGRATION TECHNIQUE

MicroShield 7.01 uses a method called Gauss quadrature for point-kernel numerical integration of the cylindrical side shield geometry specified in these models. In this method, the source is separated into a number of kernels determined by the quadrature order. In general, the greater the quadrature order, the more precise results will be output. The values of quadrature orders used in performing the integrations are:

- Radial: 50
- Circumferential: 50
- Y Direction (Axial): 101

3.4 SHIELDING PARAMETERS

Several Microshield calculations were made to determine how thick a shield layer would need to be to reduce the external dose to acceptable quantities. Lead and depleted uranium were separately modeled as cylinders around the container to determine the thickness of the material required to lower the dose rate with buildup to less than 200 mrem/hr on contact. The parameters used in the MicroShield calculations are shown in Table 1.

Table 1: Parameters for Shielding Calculations with Lead and Depleted Uranium

Parameter	Lead	Deplete Uranium
Thickness	5.25. inches	2.9 inches
Density	11.3 g/cm^3	19.1 g/cm^3
Buildup	In the lead	In the depleted uranium
Modeled as:	As lead material	As uranium material

As in the unshielded calculations,

- Dose points begin 3 inches below the midpoint of the container.
- Dose points are taken every inch along the length of the container.
- Dose points stop 3 inches above the midpoint of the container.

However, the entire length of the container was not modeled because it was determined from the unshielded modeling that the highest dose rates would be near the midpoint of the container.

The values of quadrature orders used in performing the integrations were:

- Radial: 50
- Circumferential: 50
- Y Direction (Axial): 101

Figure 2 is a diagram of the shielded canister as modeled in Microshield. The Y-axis is the vertical axis.

Figure 2: Example of Shielded Exposure Points

4. RESULTS

This section discusses the results from the MicroShield 7.01 modeling for both the shielded and unshielded container. The results are provided in exposure rate as well as dose rate.

4.1 UNSHIELDED CONTAINER

Exposure rates with and without buildup are reported. Microshield 7.01 reports exposure rate in Roentgen/hr (R/hr) and not dose rate (Rem/hr). Therefore, the exposure rate results in R/hr were multiplied by 0.88 and a quality factor of 1 to convert to dose rate, as shown in Table 2.

Table 2: Unshielded Container Results

Dose Point	Exposure Rate	Dose Rate	Exposure Rate	Dose Rate
Inches	Buildup (R/hr)	Buildup (Rem/hr)	No Buildup (R/hr)	No Buildup (Rem/hr)
52	3,856	3,393	1,155	1,016
53	3,856	3,393	1,155	1,016
54	3,856	3,393	1,155	1,016
55	3,856	3,393	1,155	1,016
56	3,856	3,393	1,155	1,016
57	3,856	3,393	1,155	1,016
58	3,856	3,393	1,155	1,016
59	3,856	3,393	1,155	1,016
60	3,856	3,393	1,155	1,016
61	3,856	3,393	1,155	1,016
62	3,856	3,393	1,155	1,016
63	3,856	3,393	1,155	1,016
64	3,856	3,393	1,155	1,016
65	3,856	3,393	1,155	1,016
66	3,856	3,393	1,155	1,016
67	3,856	3,393	1,155	1,016
68	3,856	3,393	1,155	1,016
69	3,856	3,393	1,155	1,016
70	3,856	3,393	1,155	1,016
71	3,856	3,393	1,155	1,016
72	3,856	3,393	1,155	1,016
73	3,856	3,393	1,155	1,016
74	3,856	3,393	1,155	1,016
75	3,856	3,393	1,155	1,016
76	3,856	3,393	1,155	1,016
77	3,856	3,393	1,155	1,016
78	3,856	3,393	1,155	1,016
79	3,856	3,393	1,155	1,016
80	3,856	3,393	1,155	1,016
81	3,856	3,393	1,155	1,016
82	3,856	3,393	1,155	1,016
83	3,856	3,393	1,155	1,016
84	3,856	3,393	1,155	1,016
85	3,856	3,393	1,155	1,016
86	3,856	3,393	1,155	1,016
87	3,856	3,393	1,155	1,016
88	3,856	3,393	1,155	1,016
89	3,856	3,393	1,155	1,016
90	3,856	3,393	1,155	1,016
91	3,856	3,393	1,155	1,016
92	3,856	3,393	1,155	1,016
93	3,856	3,393	1,155	1,016
94	3,856	3,393	1,155	1,016

Dose Point	Exposure Rate	Dose Rate	Exposure Rate	Dose Rate
Inches	Buildup (R/hr)	Buildup (Rem/hr)	No Buildup (R/hr)	No Buildup (Rem/hr)
95	3,856	3,393	1,155	1,016
96	3,855	3,392	1155	1016
97	3,854	3,392	1155	1016
98	3,850	3,388	1154	1016
99	3,840	3,379	1153	1015
100	3,817	3,359	1150	1012
101	3,763	3,311	1,141	1,004
102	3,638	3,201	1,115	981
103	3,361	2,958	1,047	921
104	2,806	2,469	880	774
105	1,928	1,697	578	509
106	1,072	943	281	247
107	520	458	114	100
108	244	215	44.4	39.1
109	211	186	36.0	31.7
110	228	201	39.8	35.0
111	240	211	42.7	37.6
112	248	218	44.6	39.2
113	252	222	45.8	40.3
114	254	224	46.5	40.9
115	254	224	46.8	41.2
116	253	223	46.9	41.3
117	251	221	46.7	41.1
118	247	217	46.4	40.8
119	243	214	45.8	40.3
120	238	209	45.2	39.8
121	233	205	44.4	39.1
122	227	200	43.6	38.4
123	221	194	42.6	37.5

Figure 3 is a graph of the dose rate including buildup. As is evident from both Table 2 and Figure 3, the dose to anyone handling such a container, even for 10 minutes or so, would considerably exceed the annual occupational dose limit of 5 Rem (10 CFR Part 20), and therefore in an unshielded container, the material is not contact-handled.

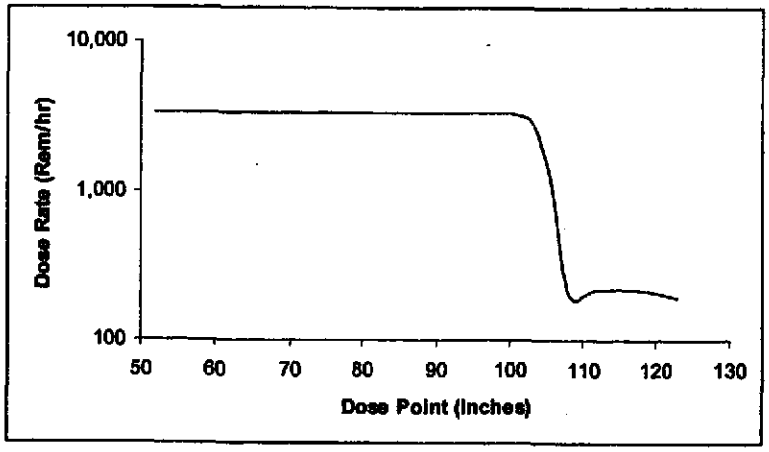

Figure 3: Dose Rate along the outside of an Unshielded Container

4.2 SHIELDED CONTAINER

As in the unshielded case, exposure rates are reported with and without buildup. MicroShield 7.01 reports exposure rate (mR/hr), rather than dose rate (mRem/hr). Therefore, the results were multiplied by 0.88 and a quality factor of 1 to convert to dose rate. Several thicknesses of both shielding materials were tried until thicknesses were found that would result in containers that could be contact-handled. Tables 3 and 4 show the final MicroShield results for lead shielding and depleted uranium (DU) shielding, respectively.

Table 3: Container with 5.25-inches of Lead Shielding

Dose Point	Exposure Rate	Dose Rate	Exposure Rate	Dose Rate
Inches	Buildup (mR/hr)	Buildup (mRem/hr)	No Buildup (mR/hr)	No Buildup (mRem/hr)
52	207	182	46	41
53	207	182	46	41
54	207	182	46	41
55	207	182	46	41
56	207	182	46	41
57	207	182	46	41

Table 4: Container with 2.9-inches of Depleted Uranium Shielding

Dose Point	Exposure Rate	Dose Rate	Exposure Rate	Dose Rate
Inches	Buildup (mR/hr)	Buildup (mRem/hr)	No Buildup (mR/hr)	No Buildup (mRem/hr)
52	168	148	47	42
53	168	148	47	42
54	168	148	47	42
55	168	148	47	42
56	168	148	47	42
57	168	148	47	42

As can be seen in Tables 3 and 4, 5.25 inches of lead or 2.9 inches of depleted uranium bring the external dose rate to within acceptable levels, if the benchmark for a contact-handled container is considered to be 200 mRem/hour at the surface.

5. CONCLUSION

The use of Co-60 as the only contents of the modeled container is admittedly conservative, but not excessively so, since Co-60 contributes the most activity to reactor activated metal. Moreover, using all of the radionuclides present would have required assumptions about interfaces, self-shielding, and buildup that would have increased the uncertainty in the calculations.

The containers need shielding if they are to be contact-handled. Remote or robotic handling of the containers would require either external shielding for workers or a distance between the worker and the container of at least 70 meters (about 200 feet), since the dose and dose rate are inversely proportional to the square of the distance between worker and container.

6. REFERENCE

Grove Software Inc., 2005, "MicroShield User's Manual – Version 7.0," Lynchburg, VA.