Greater-Than-Class C Low-Level Radioactive Waste EIS

Welcome

In accordance with the National Environmental Policy Act (NEPA), the U.S. Department of Energy (DOE) Issued a Notice of Intent to Prepare an Environmental Impact Statement (EIS) for the Disposal of Greater-Than-Class C Low-Level Radioactive Waste (GTCC LLW).

You are invited to submit comments or suggestions to assist in identifying significant environmental issues and in determining the appropriate scope of the EIS. Nine public scoping meetings are being held to provide the public with an opportunity to present comments on the scope of the EIS and learn more about the proposed action from DOE officials. The 60-day public scoping period started on July 23, 2007, and will end on September 21, 2007.

GTCC LLW EIS Public Scoping Meeting Schedule

Date	Place	Time
August 13	Carlsbad, NM	6:00-9:00 p.m.
August 14	Los Alamos, NM	6:00-9:00 p.m.
August 22	Oak Ridge, TN	6:00-9:00 p.m.
August 23	North Augusta, SC	6:00-9:00 p.m.
August 27	Troutdale, OR	6:00-9:00 p.m.
August 28	Pasco, WA	6:00-9:00 p.m.
August 30	Idaho Falls, ID	6:00-9:00 p.m.
September 4	Las Vegas, NV	6:00-9:00 p.m.
September 10	Washington, DC	1:00-5:00 p.m.

For further information contact:
Mr. James Joyce, GTCC LLW EIS Document Manager, Office of Environmental Management
U.S. Department of Energy, 1000 Independence Avenue, SW, Washington, DC 20585-0119
Telephone: (301) 903-2151, or e-mail to gtcceis@anl.gov

www.gtcceis.anl.gov

EM Environmental Management

safety ❖ performance ❖ cleanup ❖ closure

Greater-Than-Class C Low-Level Radioactive Waste EIS

Why Is DOE Preparing This EIS?

- **National Environmental Policy Act (NEPA)**
  - NEPA was enacted in 1969 and requires that Federal agencies such as DOE consider the environmental impacts of proposed actions in its decision-making process. Major federal actions require the preparation of an EIS before the action can be implemented.

- **40 CFR Parts 1500-1508**

- **10 CFR Part 1021**

- **Section 3(b)(1)(D) of the Low-Level Radioactive Waste Policy Amendments Act of 1985 (Public Law 99-240)**
  - DOE is responsible for developing GTCC LLW disposal capability
  - GTCC LLW must be disposed of in a facility licensed by the U.S. Nuclear Regulatory Commission

- **Section 631 of the Energy Policy Act of 2005 (Public Law 109-58)**
  - DOE submitted required Report to Congress dated July 2006 on EIS proposed schedule and estimated cost
  - Requires DOE to submit Report to Congress on disposal alternatives after final EIS is issued and await Congressional action before issuing Record of Decision

For further information contact:
Mr. James Joyce, GTCC LLW EIS Document Manager, Office of Environmental Management
U.S. Department of Energy, 1000 Independence Avenue, SW, Washington, DC 20585-0119
Telephone: (301) 903-2151, or e-mail to gtcceis@anl.gov

www.gtcceis.anl.gov

EM Environmental Management

safety ❖ performance ❖ cleanup ❖ closure

Greater-Than-Class C Low-Level Radioactive Waste EIS

National Environmental Policy Act (NEPA) Environmental Impact Statement (EIS)

NEPA Process for EISs. Under NEPA, the term "environment" encompasses both the physical environment (e.g., air, surface water, groundwater, geology) and the human environment (e.g., health and safety, jobs, transportation, cultural resources, land use).

The Council on Environmental Quality (CEQ) established NEPA requirements for all federal agencies, including procedures for preparing EISs. In turn, individual agencies such as DOE have established their own implementing regulations to meet or exceed these requirements. Related information is available on the DOE NEPA website at www.eh.doe.gov/nepa.

DOE is preparing the Greater-Than-Class C Low-Level Radioactive Waste (GTCC LLW) EIS for the purpose of assessing the range of reasonable alternatives for the disposal of GTCC LLW. The U.S. Environmental Protection Agency (EPA) is participating in the EIS as a cooperating agency. The Energy Policy Act of 2005 requires DOE to report to Congress on the Final EIS and await action by Congress before making a final decision.

Next Steps. Consistent with NEPA requirements, DOE is taking the following major steps in preparing the GTCC LLW EIS: Issue a Notice of Intent (NOI) to begin the EIS process; gather public and other stakeholder input on the scope of the EIS; prepare and issue the Draft EIS; receive public comments on the Draft EIS and respond to those comments in a Final EIS; and issue a Record of Decision. Based on the EIS analysis, DOE expects to make a decision on the method(s) and location(s) for disposing of GTCC LLW and DOE GTCC-like waste. A combination of disposal methods and locations may be appropriate based on the characteristics of the waste and other factors.

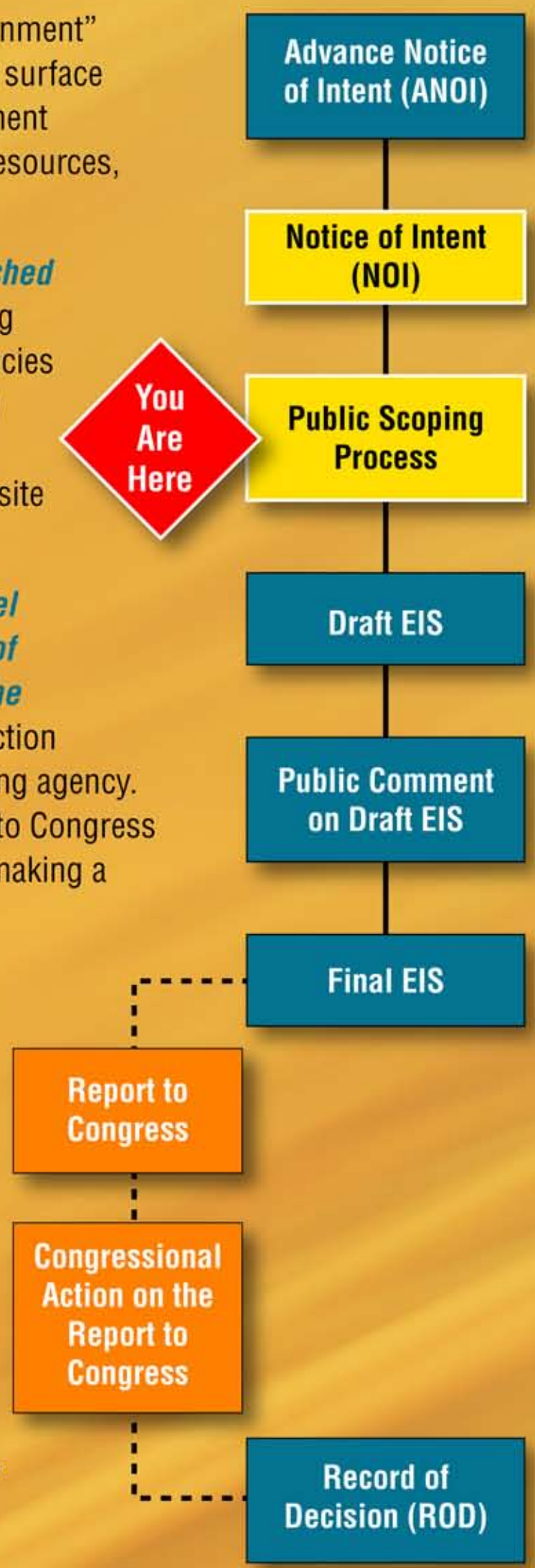

For further information contact:
Mr. James Joyce, GTCC LLW EIS Document Manager, Office of Environmental Management
U.S. Department of Energy, 1000 Independence Avenue, SW, Washington, DC 20585-0119
Telephone: (301) 903-2151, or e-mail to gtcceis@anl.gov

www.gtcceis.anl.gov

EM Environmental Management

safety ❖ performance ❖ cleanup ❖ closure

Greater-Than-Class C Low-Level Radioactive Waste EIS

Waste Terminology

What is Greater-Than-Class C Low-Level Radioactive Waste (GTCC LLW)?

- The NRC has categorized LLW into four classes in 10 CFR 61(Class A, B, C, and GTCC) based on the concentration of specific short-lived and long-lived radionuclides.

NRC Category	Summary of Waste Description	Disposal Method
Class A	Least hazardous – short and long-lived waste that will not endanger inadvertent human intruder beyond 100 years	Near-Surface
Class B	More hazardous – short-lived wastes that will not endanger inadvertent intruder beyond 100 years	Near-Surface with 300 year waste stability
Class C	More hazardous – short and long-lived wastes that will not endanger inadvertent intruder beyond 500 years	Near-Surface with 300 year waste stability, and greater depth or 500 year intruder barrier
Greater-Than-Class C	Most hazardous of LLW - dangerous to inadvertent intruder beyond 500 years. Must be disposed in geologic repository unless alternate method proposed by DOE and approved by NRC	To be determined by the Record of Decision for the GTCC LLW EIS

- Contains radionuclides at concentrations that exceed the limits for Class C radioactive waste in 10 CFR 61.55
- Generated from NRC or Agreement State licensed activities (e.g., nuclear power plant operations and decommisioning, medical uses, and other commercial activities)
- Consist of activated metals from the decommissioning of nuclear reactors, sealed sources, and other LLW resulting from manufacture, research, and industrial activities
- GTCC LLW must be disposed of in geologic repository unless other proposed methods are approved by NRC (10 CFR 61.55)
  - "There may be some instances where waste with concentrations greater than permitted for Class C would be acceptable for near-surface disposal with special processing or design" 10 CFR 61.7

What is DOE GTCC-like Waste?

- DOE LLW and transuranic waste having characteristics similar to GTCC LLW and which may not have an identified path to disposal
- Consists of activated metals, sealed sources, and other waste owned or generated by DOE activities
- Use of the term DOE GTCC-like waste does not have the intent or effect of creating a new classification of radioactive waste

For further information contact:
Mr. James Joyce, GTCC LLW EIS Document Manager, Office of Environmental Management
U.S. Department of Energy, 1000 Independence Avenue, SW, Washington, DC 20585-0119
Telephone: (301) 903-2151, or e-mail to gtcceis@anl.gov

www.gtcceis.anl.gov

EM Environmental Management

safety ❖ performance ❖ cleanup ❖ closure

Sealed Sources

Sealed Sources consist of small quantities of highly radioactive material enclosed in metal containers. These sources are used for a number of medical (cancer treatment) and industrial (detection of flaws in welds and pipelines) activities. The major radionuclides in these wastes include cesium-137 and americium-241.

Source capsule used in medical teletheraphy units

A radiography source once used for industrial applications

Abandoned Am-241 and Cs-137 sources in various cases

Well logging sources being loaded

For further information contact:
Mr. James Joyce, GTCC LLW EIS Document Manager, Office of Environmental Management
U.S. Department of Energy, 1000 Independence Avenue, SW, Washington, DC 20585-0119
Telephone: (301) 903-2151, or e-mail to gtcceis@anl.gov

EM Environmental Management
safety ❖ performance ❖ cleanup ❖ closure

Greater-Than-Class C Low-Level Radioactive Waste EIS

Activated Metal

Activated Metal waste results from decommissioning nuclear reactors. Portions of the reactor assembly and other components near the nuclear fuel are activated by neutrons during reactor operations producing high concentrations of radionuclides. The major radionuclides in these wastes include manganese-54, iron-55, cobalt-60, and nickel-63.

Radiation survey of activated metal component from decommissioning a small research reactor

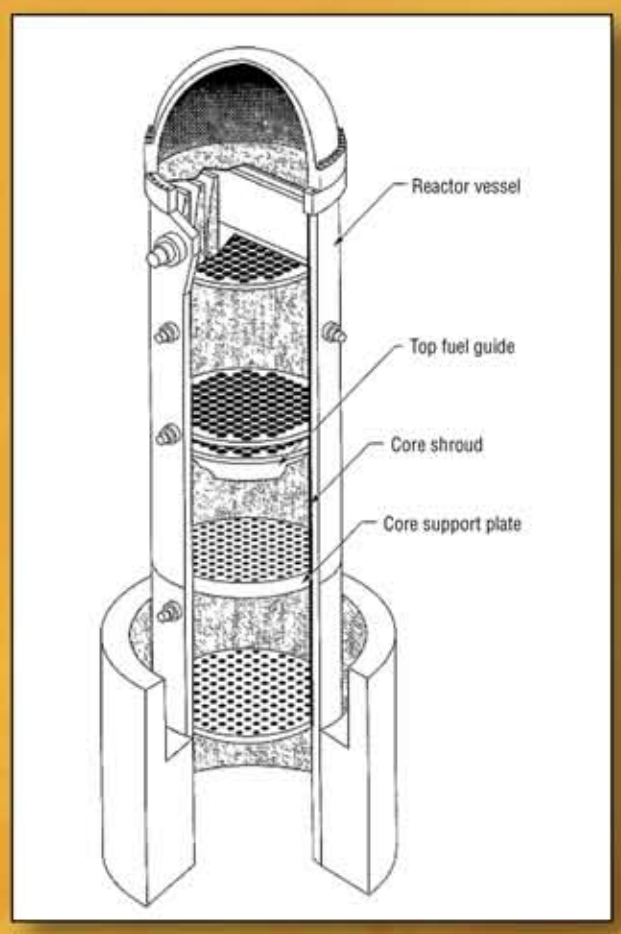

Boiling Water Reactor (BWR) decommissiong components

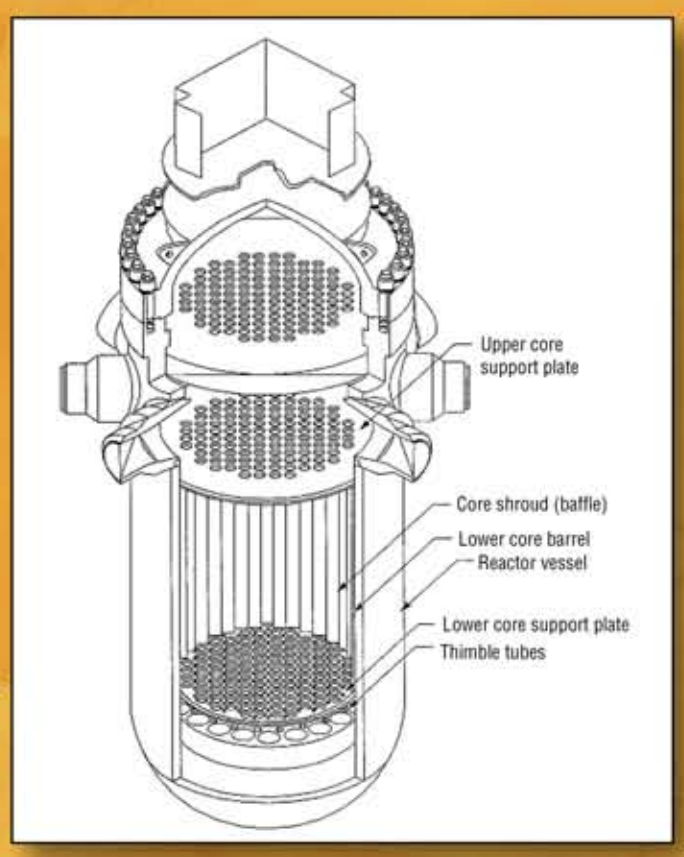

Pressurized Water Reactor (PWR) decommissioning components

For further information contact:
Mr. James Joyce, GTCC LLW EIS Document Manager, Office of Environmental Management
U.S. Department of Energy, 1000 Independence Avenue, SW, Washington, DC 20585-0119
Telephone: (301) 903-2151, or e-mail to gtcceis@anl.gov

www.gtcceis.anl.gov

EM Environmental Management

safety ❖ performance ❖ cleanup ❖ closure

Other Waste

Other Waste consists primarily of debris (containing wood, plastic, cloth, metal, respirator suits) and contaminated equipment such as contaminated glove boxes having high concentrations of radionuclides. The major radionuclides in this waste include cesium-137, plutonium-238 and americium-241. Most of this waste may be transuranic waste generated by non-defense DOE activities and which may not have an identified path to disposal.

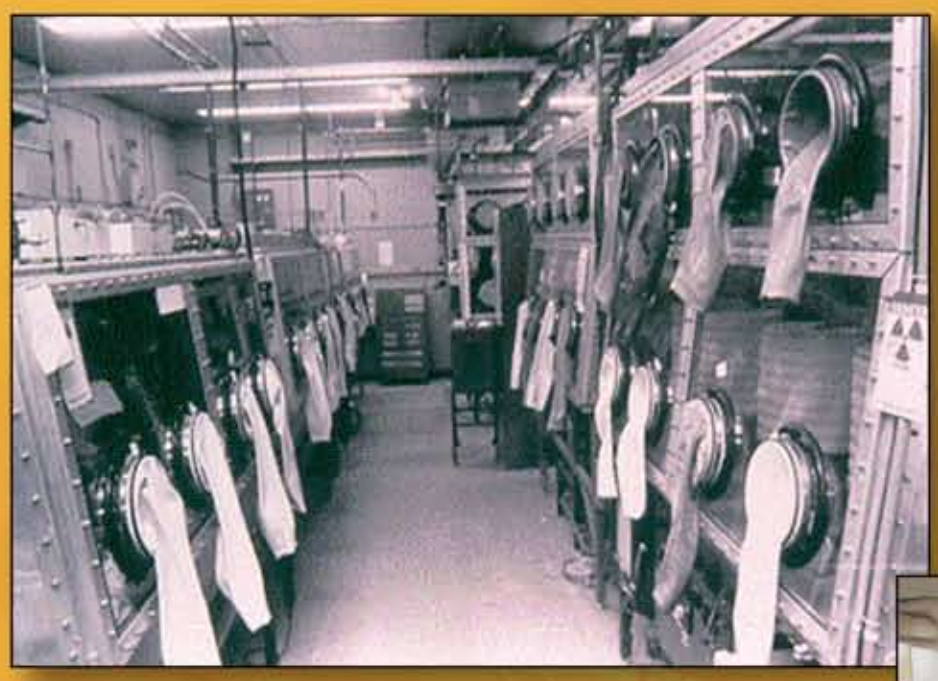

Contaminated glove boxes

Contaminated glove boxes

For further information contact:
Mr. James Joyce, GTCC LLW EIS Document Manager, Office of Environmental Management
U.S. Department of Energy, 1000 Independence Avenue, SW, Washington, DC 20585-0119
Telephone: (301) 903-2151, or e-mail to gtcceis@anl.gov

www.gtcceis.anl.gov

EM Environmental Management
safety ❖ performance ❖ cleanup ❖ closure

Greater-Than-Class C Low-Level Radioactive Waste EIS

GTCC LLW and DOE GTCC-like Waste Inventory

About 18% of the total inventory is in storage with the remainder projected to be generated by 2062. Inventory consists of three waste types: sealed sources, activated metal, and other wastes.

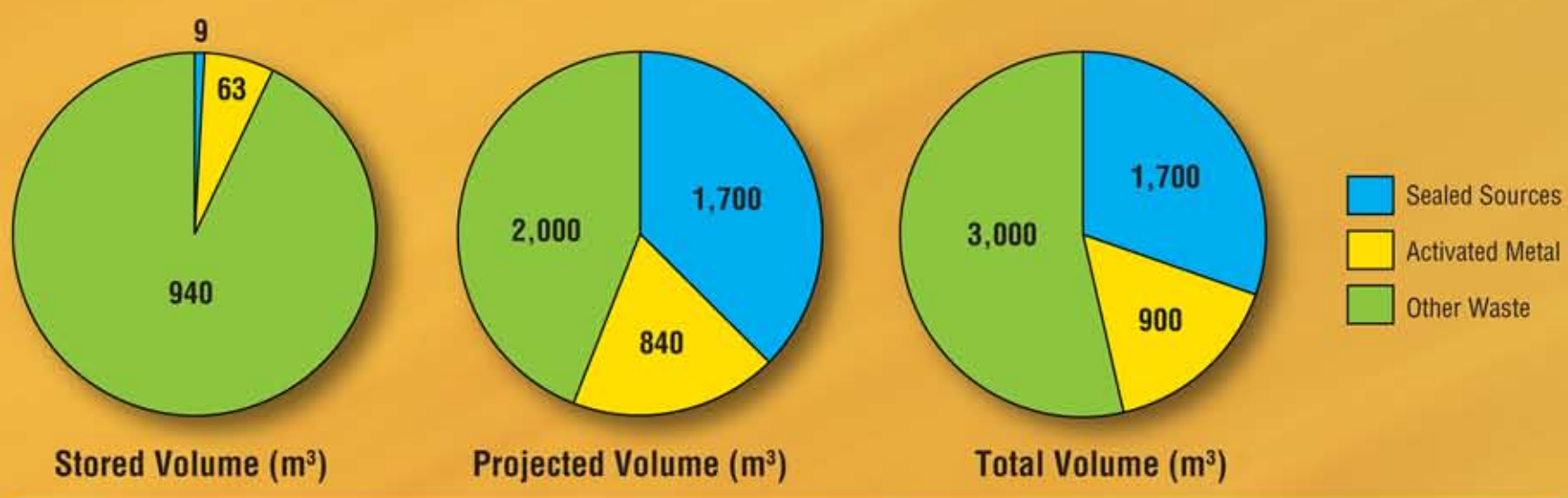

About 3,000 m³ of the total inventory of 5,600 m³ is DOE GTCC-like waste.

The total volume of GTCC LLW and DOE GTCC-like waste is much smaller than the volume of LLW generated over the same period of time, but contains more activity.

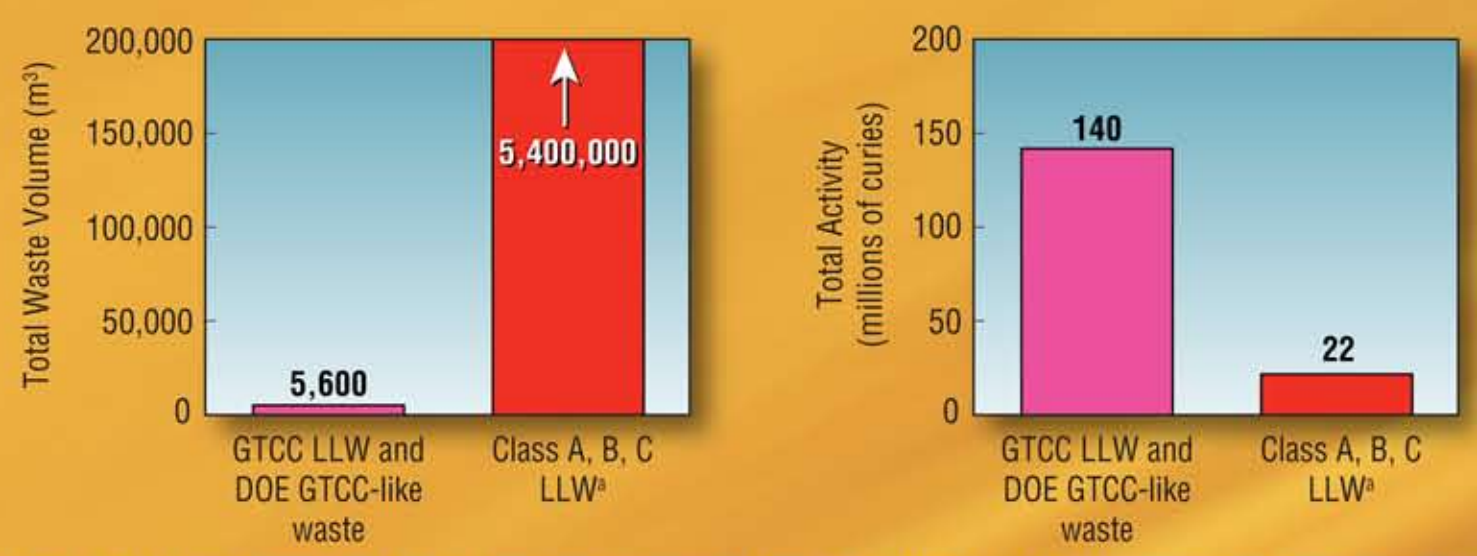

[a]Class A, B, C LLW volumes and activities were obtained from the DOE MIMS database, and are projected to 2062.

Volumes have been rounded for presentation purposes.
Source of GTCC LLW and DOE GTCC-like waste information: "*Greater-Than-Class-C Low-Level Radioactive Waste Inventory Estimates*", prepared by Sandia National Laboratories for the U.S. Department of Energy, July 2007.

For further information contact:
Mr. James Joyce, GTCC LLW EIS Document Manager, Office of Environmental Management
U.S. Department of Energy, 1000 Independence Avenue, SW, Washington, DC 20585-0119
Telephone: (301) 903-2151, or e-mail to gtcceis@anl.gov
www.gtcceis.anl.gov

EM Environmental Management
safety ❖ performance ❖ cleanup ❖ closure

Greater-Than-Class C Low-Level Radioactive Waste EIS

DOE's Proposed EIS Scope

DOE's Proposed Action

DOE proposes to construct and operate a new facility or facilities or use an existing facility for the disposal of GTCC LLW and DOE GTCC-like waste. DOE would then close the facility or facilities at the end of the facility's operational life. DOE proposes to use one or more of three disposal methods at one or more DOE sites and commercial locations.

Proposed Disposal Locations

Based on mission compatibility (sites that currently have waste disposal operations as part of their mission) and site characteristics, the DOE sites shown below are proposed for the EIS analysis.

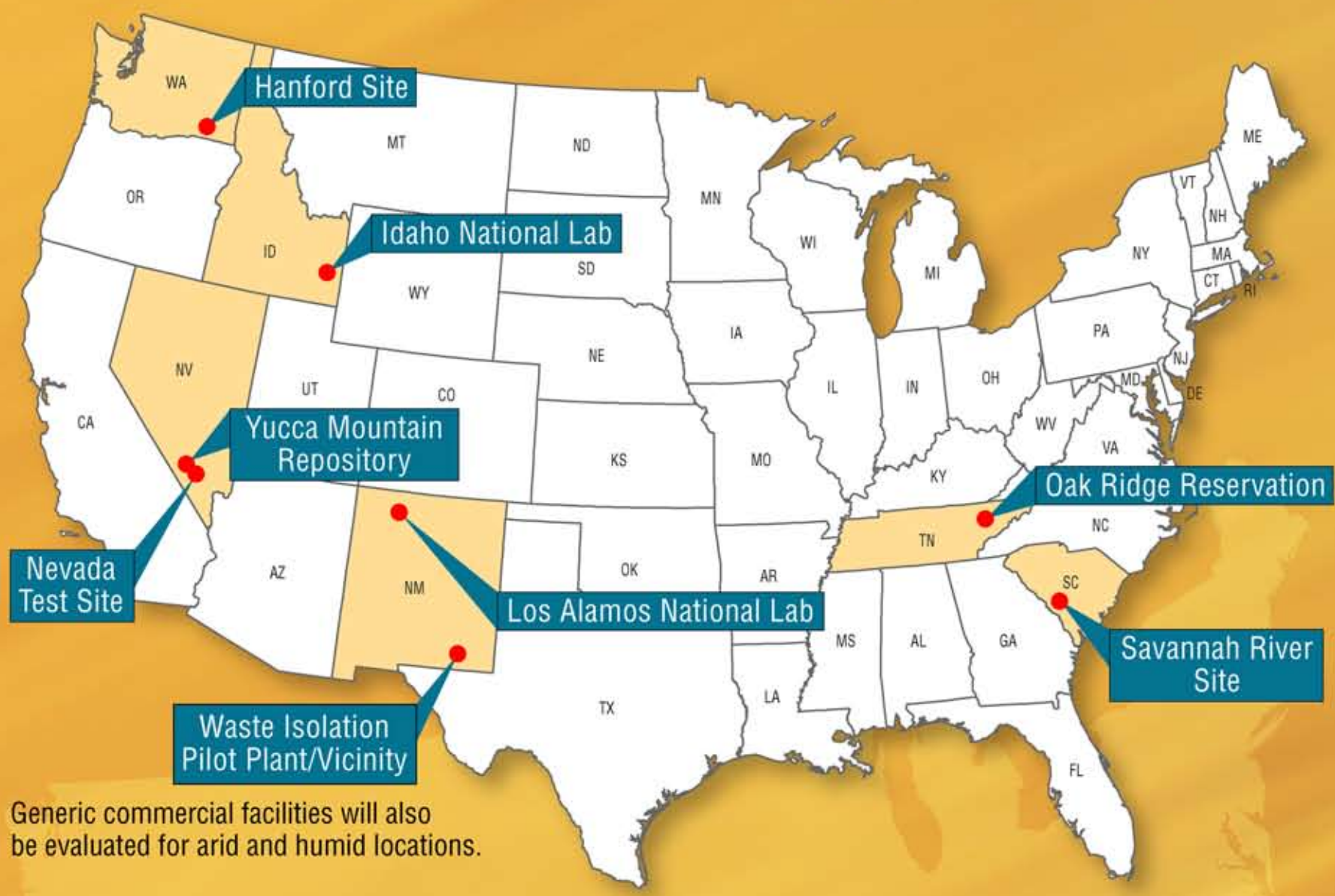

Generic commercial facilities will also be evaluated for arid and humid locations.

Proposed Disposal Methods

- **Geologic Disposal**
  (Waste Isolation Pilot Plant and Yucca Mountain Repository)
- **Enhanced Near Surface Disposal**
  (Hanford Site, Idaho National Laboratory, Los Alamos National Laboratory, Nevada Test Site, Oak Ridge Reservation, Savannah River Site, Waste Isolation Pilot Plant Vicinity, and generic commercial locations)
- **Intermediate Depth Borehole Disposal**
  (same proposed locations as for the Enhanced Near Surface Disposal)

For further information contact:
Mr. James Joyce, GTCC LLW EIS Document Manager, Office of Environmental Management
U.S. Department of Energy, 1000 Independence Avenue, SW, Washington, DC 20585-0119
Telephone: (301) 903-2151, or e-mail to gtcceis@anl.gov

www.gtcceis.anl.gov

EM Environmental Management

safety ❖ performance ❖ cleanup ❖ closure

Greater-Than-Class C Low-Level Radioactive Waste EIS

Geologic Disposal

Geologic disposal involves placement of waste in mined cavities deep beneath the earth's surface. This method is currently being used for disposal of defense transuranic (TRU) waste at the Waste Isolation Pilot Plant (WIPP), and is the planned approach for disposal of high-level radioactive waste and spent nuclear fuel in the Yucca Mountain Repository.

Excavation operations at WIPP

Removal of TRU wastes from transport vehicle at WIPP

Disposal of contact-handled TRU wastes at WIPP

For further information contact:
Mr. James Joyce, GTCC LLW EIS Document Manager, Office of Environmental Management
U.S. Department of Energy, 1000 Independence Avenue, SW, Washington, DC 20585-0119
Telephone: (301) 903-2151, or e-mail to gtcceis@anl.gov

www.gtcceis.anl.gov

EM Environmental Management

safety ❖ performance ❖ cleanup ❖ closure

Greater-Than-Class C Low-Level Radioactive Waste EIS

Enhanced Near Surface Disposal

Enhanced near-surface disposal involves the placement of wastes in engineered trenches, vaults, or other similar facilities at depths of up to 30 meters. The containment characteristics of these disposal facilities are enhanced by incorporating features such as barriers, deeper depth to disposal, and special waste forms and packaging.

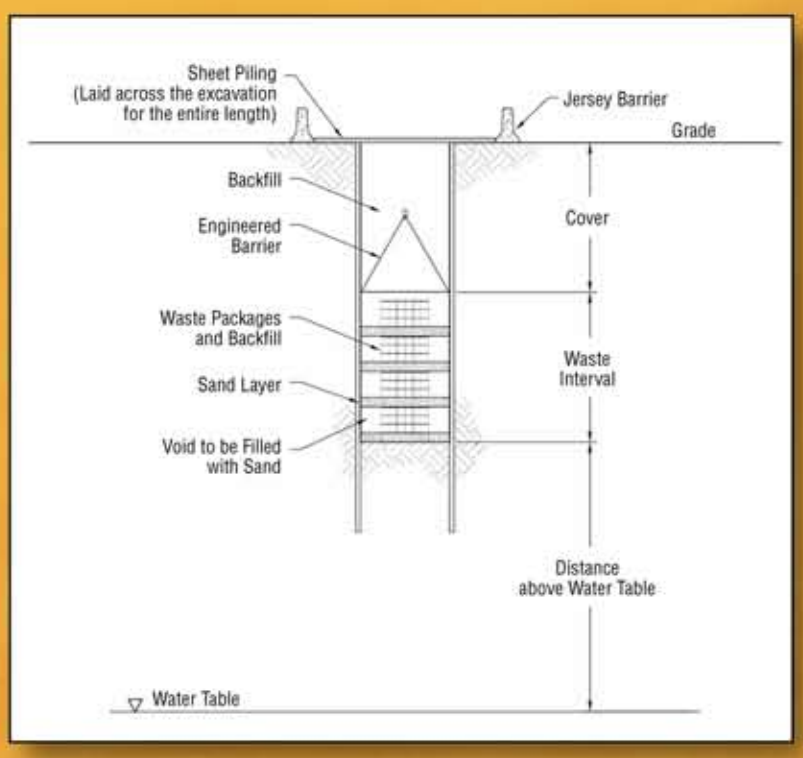

Schematic drawing of conceptual enhanced near surface disposal facility

Concrete LLW disposal vault at a DOE facility

For further information contact:

Mr. James Joyce, GTCC LLW EIS Document Manager, Office of Environmental Management
U.S. Department of Energy, 1000 Independence Avenue, SW, Washington, DC 20585-0119
Telephone: (301) 903-2151, or e-mail to gtcceis@anl.gov

www.gtcceis.anl.gov

EM Environmental Management

safety ❖ performance ❖ cleanup ❖ closure

Greater-Than-Class C Low-Level Radioactive Waste EIS

Intermediate Depth Borehole

Intermediate depth borehole disposal involves the use of drilling equipment to construct a borehole (deeper than 30 meters) in the ground. The wastes are then placed in the borehole up to about 30 meters from the surface, and the remaining space in the borehole is backfilled.

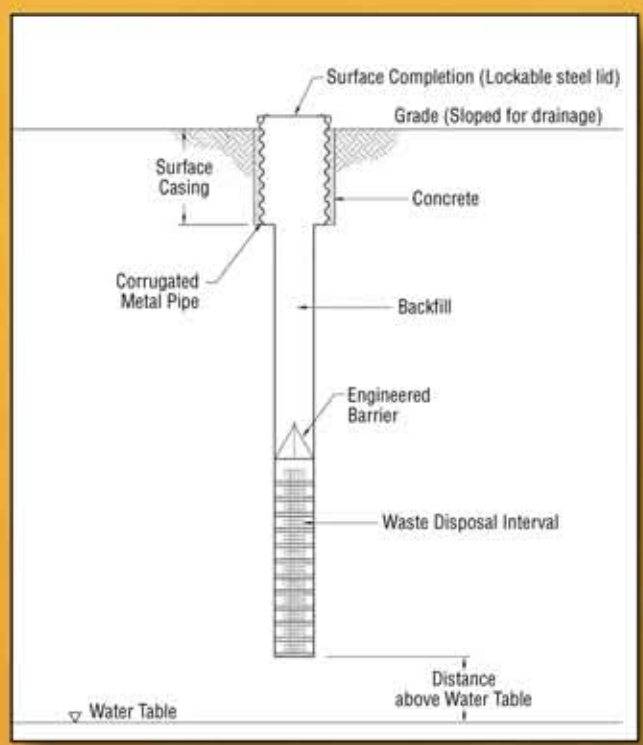

Schematic drawing of conceptual intermediate depth borehole disposal facility

Drilling equipment used to develop boreholes at a DOE facility

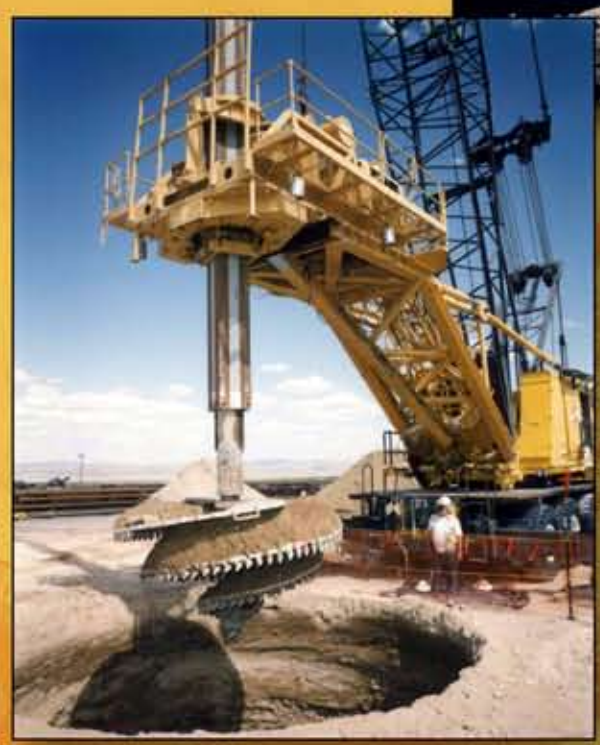

Closeup of drilling equipment

For further information contact:
Mr. James Joyce, GTCC LLW EIS Document Manager, Office of Environmental Management
U.S. Department of Energy, 1000 Independence Avenue, SW, Washington, DC 20585-0119
Telephone: (301) 903-2151, or e-mail to gtcceis@anl.gov

www.gtcceis.anl.gov

EM Environmental Management

safety ❖ performance ❖ cleanup ❖ closure